YAMAHA

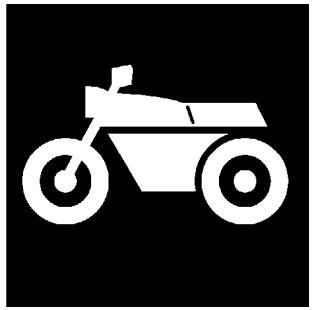

PARTS CATALOGUE
CATALOGO DE REPUESTOS

YD110 (5C91) COLOMBIA

1E5C9-261S1

( )

YAMAHA
GENUINE
Parts & Accessories

YD110
PARTS CATALOGUE
©2006 by Yamaha Motor Co., Ltd.
1st edition, March 2006
All rights reserved.
Any reprinting or unauthorized use
without the written permission of
Yamaha Motor Co., Ltd.
is expressly prohibited.
Printed in Japan.

YD110
CATALOGO DE REPUESTOS
©2006 por Yamaha Motor Co., Ltd.
1ª edición, marzo 2006
Todos los derechos reservados.
Toda reproducción o uso no autorizado
sin el consentimiento escrito de
Yamaha Motor Co., Ltd.
quedan expresamente prohibidos
Impreso en Japón.

FOREWORD

This Parts Catalogue is related to the parts for the model(s) on the cover page. When you are ordering replacement parts, please refer to this Parts Catalogue and quote both part numbers and part names correctly.

1. Modifications or additions which have been made after the issue of the Parts Catalogue will be announced in the Parts News.
   It is advisable that you make the necessary corrections to the Parts Catalogue according to the Parts News.

2. Abbreviations
   The following abbreviations are used in this Parts Catalogue.

   “UR” Use specified parts number.
   “UN” Use as many as needed.
   “AP” Alternate Parts
   “LM” Locally Made (Parts need to be ordered locally)
   “F#” Frame No. (Applicable machine No.)
   “O/S” Over Size

3. The number of components for assembly
   - Parts, which are to be supplied in an assembly, are listed with a dot (.) in front of the part name as shown below.
   - The numeral appearing to the right of each component part indicates the quantity of parts for each assembly unit.

PART NO.	DESCRIPTION	Q’TY	REMARKS
2F5–83310–60	FRONT FLASHER LIGHT ASSY	2	
115–83311–60	.BULB (6V–18W)	1	

4. Applicable colours of graphics are represented in the “REMARKS” as shown below.

PART NO.	DESCRIPTION	Q’TY	REMARKS
2N4–24110–00–X5	FUEL TANK COMP.	2	MXR
3J1–24240–10	.GRAPHIC, FUEL TANK	1	FOR MXR

5. Note that the illustrations for reference in finding parts numbers are not to be used for assembling. When assembling, please use the applicable service manual.

6. The asterisk (*) before a reference number indicates modified items after the first edition.

PROLOGO

Este catálogo de repuestos corresponde a las piezas para el o los modelos que figuran en la página de portada. Al formular el pedido de repuestos, se ruega citar este catálogo y especificar correctamente el número y el nombre de las piezas.

1. Las modificaciones y agregados que se hayan realizado después de la edición de este Catálogo de Repuestos, serán anunciados en las Informaciones de Recambios.
   Es recomendable que se hagan las correcciones necesarias en el Catálogo de Repuestos de acuerdo con las Informaciones de Recambios.

2. Abreviaciones
   En este. Catálogo de Repuestos se emplean las siguientes abreviaciones.

   "UR" Usar el número de partes especificado
   "UN" Usar la cantidad necesaria
   "AP" Piezas sustitutivas
   "LM" Fabricación local (Hay que pedir los repuestos en las cercanías)
   "F#" Nº de bastidor (Nº aplicable a la máquina)
   "O/S" Sobredimensionado

3. La cantidad de componentes para el montaje
   - Los componentes, suministrados como conjunto, se describen con un punto (.) que precede al nombre del parte como se indica a continuación.
   - La numeración que aparece a la derecha de cada descripción indica la cantidad de partes por cada unidad de conjunto.

CODIGO Nº	DESCRIPCION	CANT.	OBSERVACIONES
2F5–83310–60	ENSAMBLAJE DE LA LUZ	2	
115–83311–60	.BOMBILLA (6V–18W)	1	

4. Los colores de los componentes se indican como sigue en la columna de "OBSERVACIONES".

CODIGO Nº	DESCRIPCION	CANT.	OBSERVACIONES
2N4–24110–00–X5	COMP. DEL TANQUE	2	MXR
3J1–24240–10	.GRAFICO, DEL TANQUE	1	PARA MXR

5. Debe tenerse en cuenta que las ilustraciones sirven como guia para la búsqueda de los números de partes y no deben usarse para el montaje. Durante el montaje, se recomienda usar el manual de taller correspondiente.

6. EL asterisco (*) antes del número de referencia indica los elementos modificados después de la primera edición.

7. Applicable Serial No.

Frame Serial No.

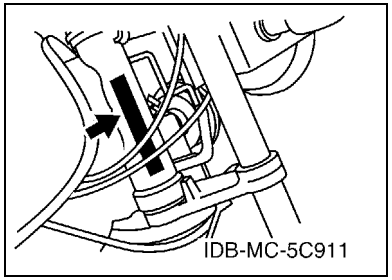

Engine Serial No.

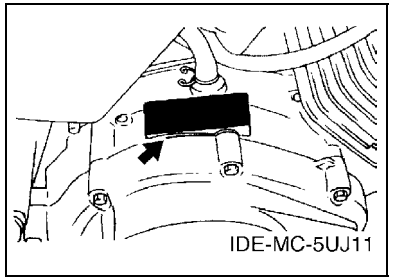

8. Applicable Colour Code (The (*) mark shows Model colour.)

Abbreviation	Colour Name	Colour Code
CNM(*)	CANDY MAROON	00H6
S3(*)	SILVER 3	0791
YB(*)	YAMAHA BLACK	0033
DPBMC(*)	DEEP PURPLISH BLUE METALLIC C	0564

9. Applicable Starting Serial No.

Frame Serial No.

Serial No.	Name Of Q'ty Column	Model Code

Engine Serial No.

Serial No.	Name Of Q'ty Column	Model Code

7. Números de serie

Nº de Serie del bastidor

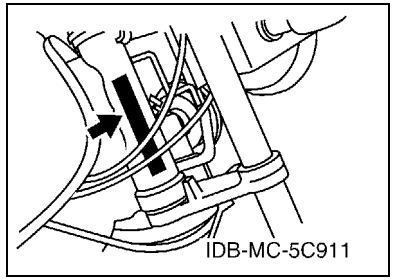

Nº de Serie del motor

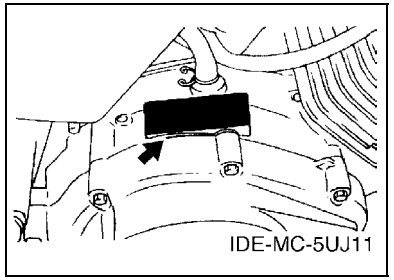

8. Códigos de color aplicables (El símbolo (*) muestra el color de modelo.)

Abreviatura	Nombre de color	Código de color
CNM(*)	CANDY MAROON	00H6
S3(*)	SILVER 3	0791
YB(*)	YAMAHA BLACK	0033
DPBMC(*)	DEEP PURPLISH BLUE METALLIC C	0564

9. Nº de serie inicial aplicable

Nº de Serie del bastidor

Nº de serie	Nombre de la columna de cantidades	Código de Modelo

Nº de Serie del motor

Nº de serie	Nombre de la columna de cantidades	Código de Modelo

CONTENTS

ENGINE

CYLINDER 1
CRANKSHAFT & PISTON 2
VALVE 3
CAMSHAFT & CHAIN 4
OIL PUMP 5
INTAKE 6
CARBURETOR 7
EXHAUST 8
CRANKCASE 9
CRANKCASE COVER 1 10
STARTER 11
CLUTCH 12
TRANSMISSION 13
SHIFT CAM & FORK 14
SHIFT SHAFT 15

CHASSIS

FRAME 16
FENDER 17
SIDE COVER 18
REAR ARM & SUSPENSION 19
STEERING 20
FRONT FORK 21
FUEL TANK 23
SEAT 25
FRONT WHEEL 26
REAR WHEEL 28
STEERING HANDLE & CABLE 30
STAND & FOOTREST 31
GENERATOR 33
FLASHER LIGHT 34
METER 35
HEADLIGHT 36
TAILLIGHT 37
HANDLE SWITCH & LEVER 38
ELECTRICAL 1 39
ELECTRICAL 2 40

INDEX

NUMERICAL INDEX 41

CONTENIDO

MOTOR

CILINDRO 1
CIGUENAL & PISTON 2
VALVULA 3
ARBOL DE LEVAS & CADENA 4
BOMBA DE ACEITE 5
ADMISION 6
CARBURADOR 7
DESCARGA 8
CARTER 9
CUBIERTA DE CARTER 1 10
ARRANQUE 11
EMBRAGUE 12
TRANSMISION 13
LEVA DE CAMBIO & HORQUILLA 14
EJE DE CAMBIO & PEDAL 15

SHASIS

CUADRO 16
GUARDABARRO 17
CUBIERTA LATERAL 18
BRAZO TRASERO & SUSPENSION 19
DIRECCION 20
HORQUILLA DELANTERA 21
DEPOSITO DE COMBUSTIBLE 23
ASIENTO 25
RUEDA DELANTERA 26
RUEDA TRASERA 28
MANILLAR & CABLE 30
SOPORTE & APOYAPIE 31
GENERADOR 33
LUZ DE DESTELLADOR 34
MEDIDOR 35
FARO DELANTERO 36
LUZ DE COLA 37
INTERRUPTOR DE MANILLAR&PALANC 38
EQUIPO ELECTRICO 1 39
EQUIPO ELECTRICO 2 40

INDICE

INDICE NUMERICO 41

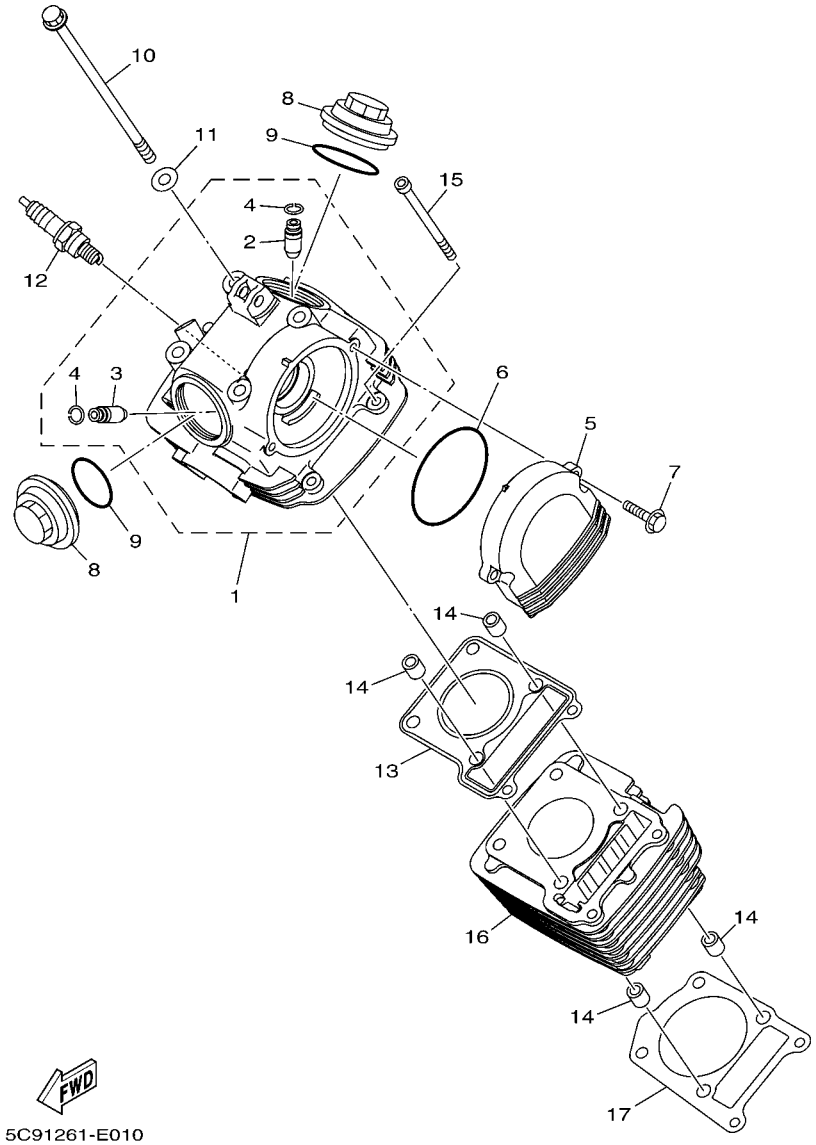

FIG. 1 CYLINDER CILINDRO

REF. NO.	PART NO. CODIGO Nº	DESCRIPTION DESCRIPCION	5C91					REMARKS OBSERVACIONES
1	5TS–E1111–01	HEAD, CYLINDER 1 CULATA CILINDRO 1	1					UR UR
	5KA–E1111–11	HEAD, CYLINDER 1 CULATA CILINDRO 1	1					UR UR
2	4LS–E1133–10	.GUIDE, VALVE 1 .GUIA DE VALVULA 1	1					
3	4LS–E1134–10	.GUIDE, VALVE 2 .GUIA DE VALVULA 2	1					
4	93440–10109	.CIRCLIP .SEGURO	2					
5	5KA–E1185–00	COVER, CYLINDER HEAD SIDE 1 CUBIERTA CULATA CIL.LAT.1	1					
6	93210–71462	O-RING ANILLO O	1					
7	95027–06020	BOLT, FLANGE PERNO, DE BRIDA	2					
8	4LS–E1186–00	COVER, CYLINDER HEAD SIDE 1 CUBIERTA CULATA CIL.LAT.1	2					
9	93210–44889	O-RING ANILLO O	2					
10	90105–08845	BOLT, FLANGE TORNILLO	4					
11	90201–08609	WASHER, PLATE ARANDELA PLANA	4					
12	94701–00862	PLUG, SPARK (NGK DPR7EA) BUJIA (NGK DPR7EA)	1					
13	5KA–E1181–00	GASKET, CYLINDER HEAD 1 JUNTA, DE CULATA 1	1					
14	99530–10114	PIN, DOWEL PASADOR, DE ESPIGA	4					
15	90110–06804	BOLT, HEXAGON SOCKET HEAD TORNILLO ALLEN	2					
16	5TS–E1311–00	CYLINDER 1 CILINDRO 1	1					
17	4LS–E1351–00	GASKET, CYLINDER JUNTA, DE CILINDRO	1					

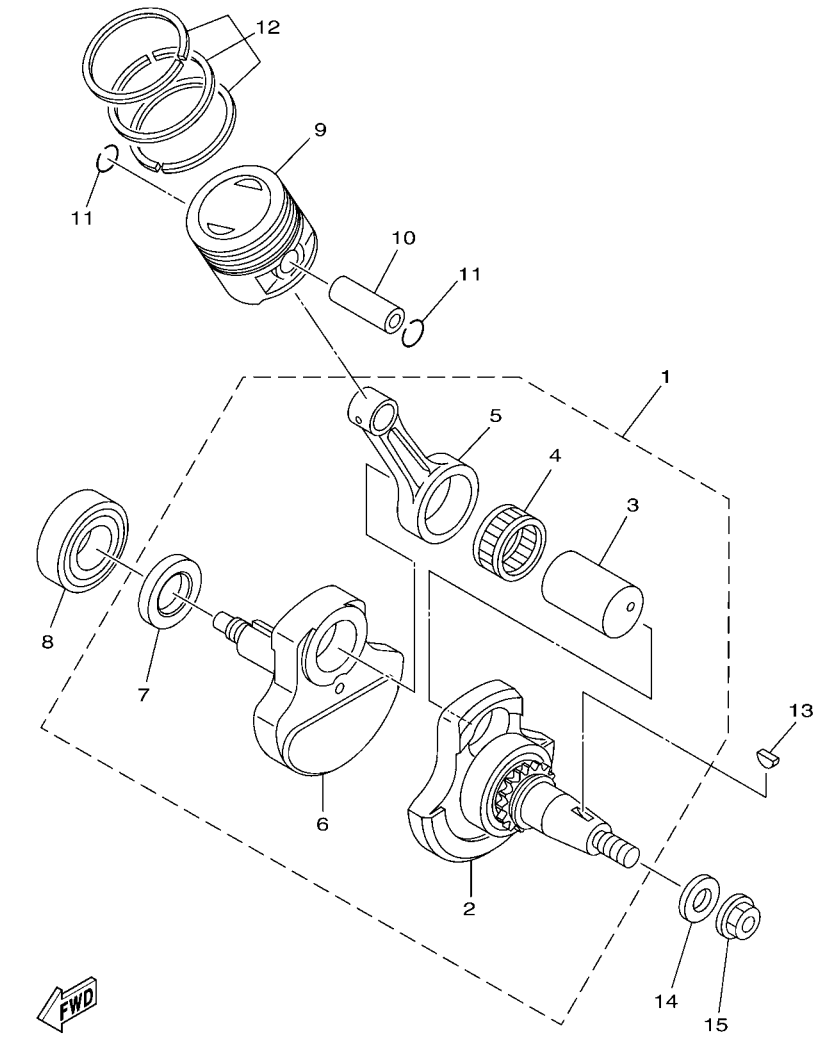

FIG. 2 CRANKSHAFT & PISTON CIGUENAL & PISTON

REF. NO.	PART NO. CODIGO Nº	DESCRIPTION DESCRIPCION	5C91					REMARKS OBSERVACIONES
1	5TS–E1400–11	CRANKSHAFT ASSY CIGUENAL COMPLETO	1					
2	5KA–WE141–00	.CRANK 1 .MANIVELA 1	1					
3	5KA–E1681–01	.PIN, CRANK 1 .PASADOR MANIVELA 1	1					
4	93310–326Y7	.BEARING .COJINETE DE RODILLOS	1					
5	5TS–E1651–11	.ROD, CONNECTING .BIELA	1					
6	5KA–E1422–00	.CRANK 2 .MANIVELA 2	1					
7	5KA–E1445–00	.SPACER .ESPACIADOR	1					
8	93306–205X3	BEARING COJINETE	1					
9	5TS–E1631–00	PISTON (STD) PISTON (NORMA)	1					
	5TS–E1636–00	PISTON (0.50MM O/S) PISTON (0.50MM O/S)	1					AP AP
	5TS–E1638–00	PISTON (1.00MM O/S) PISTON (1.00MM O/S)	1					AP AP
10	5KA–E1633–00	PIN, PISTON PASADOR, PISTON	1					
11	93450–14088	CIRCLIP SEGURO	2					
12	5KA–E1603–00	PISTON RING SET (STD) JUEGO DE ANILLOS (NORMA)	1					
	5KA–E1605–00	PISTON RING SET (0.50MM O/S) JUEGO DE ANILLOS (0.50MM O/S)	1					AP AP
	5KA–E1607–00	PISTON RING SET (1.00MM O/S) JUEGO DE ANILLOS (1.00MM O/S)	1					AP AP
13	90280–03017	KEY, WOODRUFF CUNA WOODRUFF	1					
14	90201–122H1	WASHER, PLATE ARANDELA PLANA	1					
15	95707–12500	NUT, FLANGE TUERCA DE BRIDA	1					

FIG. 3 VALVE — VALVULA

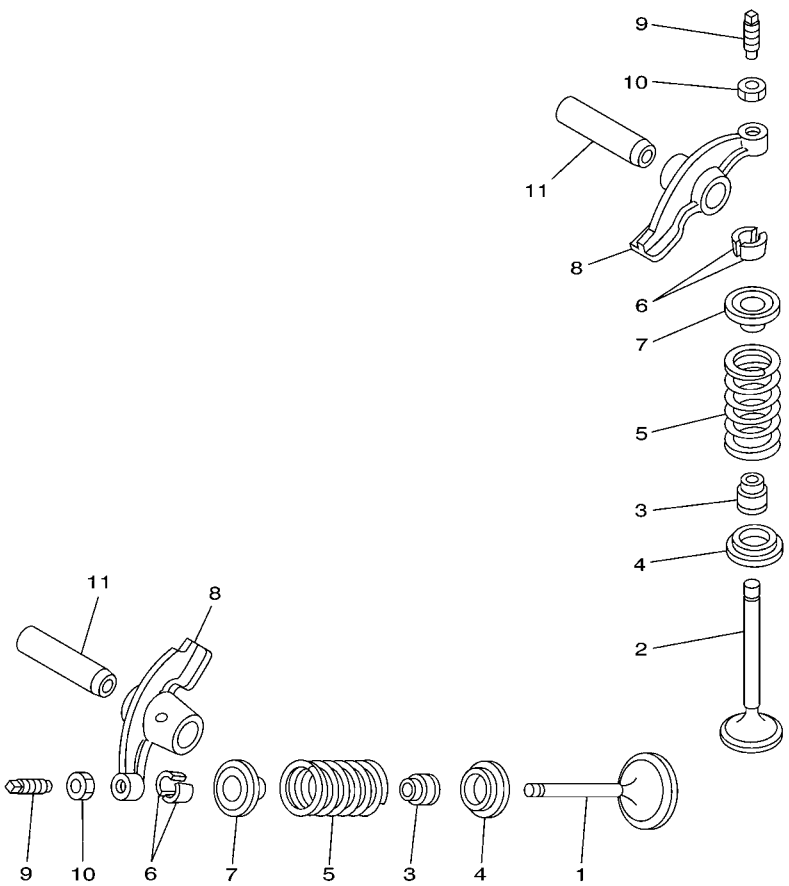

5UJ3200-B030

REF. NO.	PART NO. CODIGO Nº	DESCRIPTION DESCRIPCION	5C91					REMARKS OBSERVACIONES
1	5KA–E2111–00	VALVE, INTAKE VALVULA DE ADMISION	1					
2	5KA–E2121–00	VALVE, EXHAUST VALVULA DE ESCAPE	1					
3	4LS–E2119–00	SEAL, VALVE STEM SELLO DE ACEITE VALVULA	2					
4	4LS–E2116–00	SEAT, VALVE SPRING ASIENTO RESORTE DE VALVULA	2					
5	5YY–E2113–00	SPRING, VALVE INNER RESORTE VALVULA INTERNA	2					
6	4LS–E2118–00	COTTER, VALVE SEGURO DE VALVULA	4					
7	4LS–E2117–00	RETAINER, VALVE SPRING RETEN RESORTE DE VALVULA	2					
8	5YY–E2151–00	ARM, VALVE ROCKER BRAZO DE BALANCIN DE VALVULA	2					
9	4LS–E2159–01	SCREW, VALVE ADJUSTING TORNILLO DE AJUSTE DE VALVULA	2					
10	90170–05302	NUT TUERCA	2					
11	4LS–E2156–00	SHAFT, ROCKER 2 EJE DE BALANCIN	2					

FIG. 4 CAMSHAFT & CHAIN ARBOL DE LEVAS & CADENA

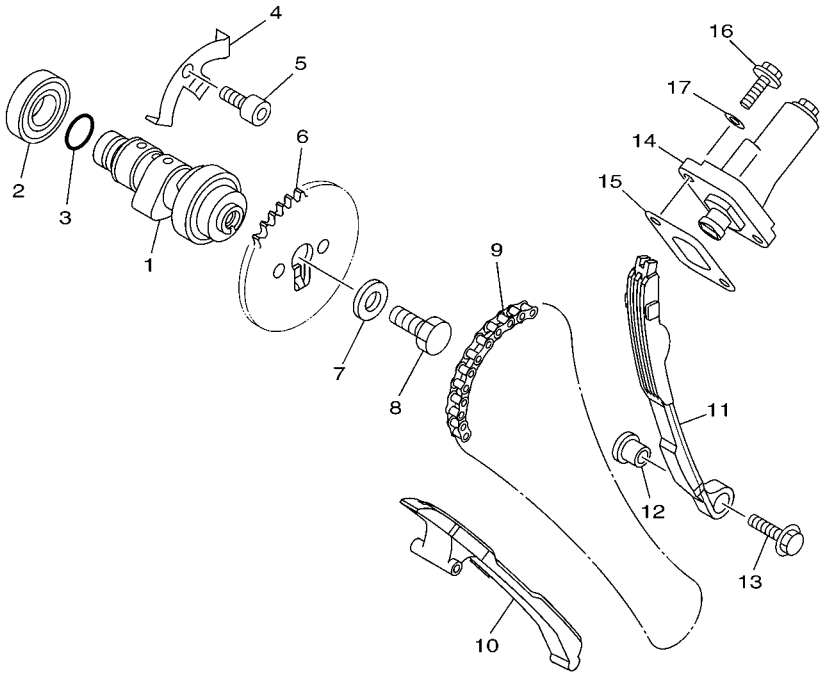

5C91261-E040

REF. NO.	PART NO. CODIGO Nº	DESCRIPTION DESCRIPCION	5C91					REMARKS OBSERVACIONES
1	5TS–E2170–00	CAMSHAFT ASSY 1 ARBOL DE LEVAS COMPLETO 1	1					
2	93306–002Y1	BEARING COJINETE	1					
3	93210–108B1	O-RING ANILLO O	1					
4	4LS–E111F–00	PLATE PLACA	1					
5	91317–06012	BOLT PERNO	1					
6	4LS–E2176–00	SPROCKET, CAM CHAIN CATALINA DE CADENA	1					
7	90201–08326	WASHER, PLATE ARANDELA PLANA	1					
8	90101–08590	BOLT TORNILLO	1					
9	94568–43090	CHAIN CADENA	1					
10	5KA–E2231–00	GUIDE, STOPPER 1 TOPE DE GUIA 1	1					
11	5KA–E2241–00	GUIDE, STOPPER 2 TOPE DE GUIA 2	1					
12	4LS–E5598–00	COLLAR COLLAR	1					
13	95807–06020	BOLT, FLANGE TORNILLO	1					
14	4LS–E2210–00	TENSIONER ASSY, CAM CHAIN TENSOR CADENA DE LEVA	1					
15	4LS–E2213–00	GASKET, TENSIONER CASE EMPAQUE DE CAJA TENSOR	1					
16	95027–06016	BOLT, FLANGE PERNO, DE BRIDA	2					
17	90430–06817	GASKET JUNTA	2					

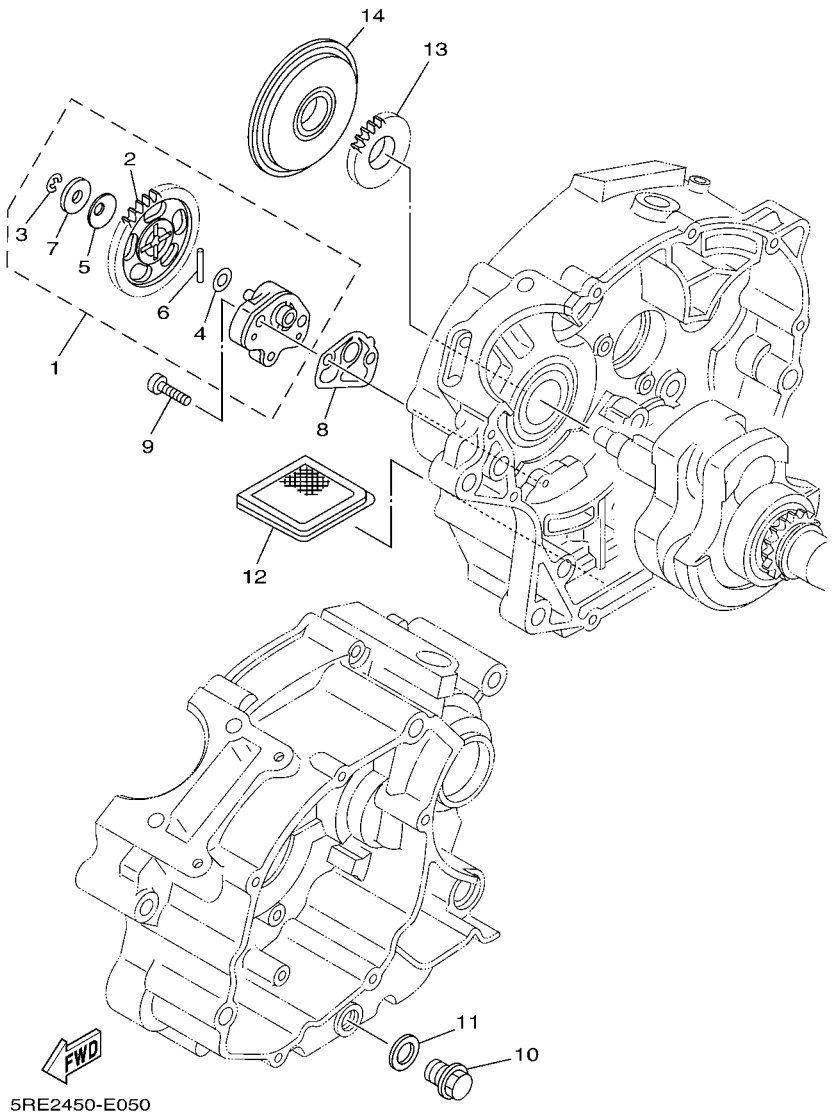

FIG. 5 OIL PUMP — BOMBA DE ACEITE

REF. NO.	PART NO. CODIGO Nº	DESCRIPTION DESCRIPCION	5C91					REMARKS OBSERVACIONES
1	5YY–E3300–00	OIL PUMP ASSY BOMBA DE ACEITE COMPLETA	1					
2	5KA–E3325–20	.GEAR, PUMP DRIVEN .ENGRANAJE IMPULSOR DE BOMBA	1					
3	99001–05600	.CIRCLIP .PRESILLA REDONDA	1					
4	90201–07641	.WASHER, PLATE .ARANDELA PLANA	1					
5	90208–07052	.WASHER, CONICAL SPRING .ARANDELA DE RESORTE CONICO	1					
6	93602–20800	.PIN, DOWEL .PASADOR DE CLAVIJA	1					
7	90201–07800	.WASHER, PLATE .ARANDELA PLANA	1					
8	4LS–E3329–00	GASKET, PUMP COVER EMPAQUE TAPA DE BOMBA	1					
9	90155–06800	SCREW, FLAT FILLISTER TORNILLO CABEZA PLANA RAN.	2					
10	90340–12097	PLUG, STRAIGHT SCREW TORNILLO, DE DRENAJE	1					
11	90430–12227	GASKET JUNTA	1					
12	4LS–E3411–00	STRAINER, OIL FILTRO DE ACEITE	1					
13	4LS–E3324–00	GEAR, PUMP DRIVE (22T) ENGRANAJE TRACC. DE BOMBA(22T)	1					
14	4LS–E3451–00	FILTER,ROTARY FILTRE ROTATIVO	1					

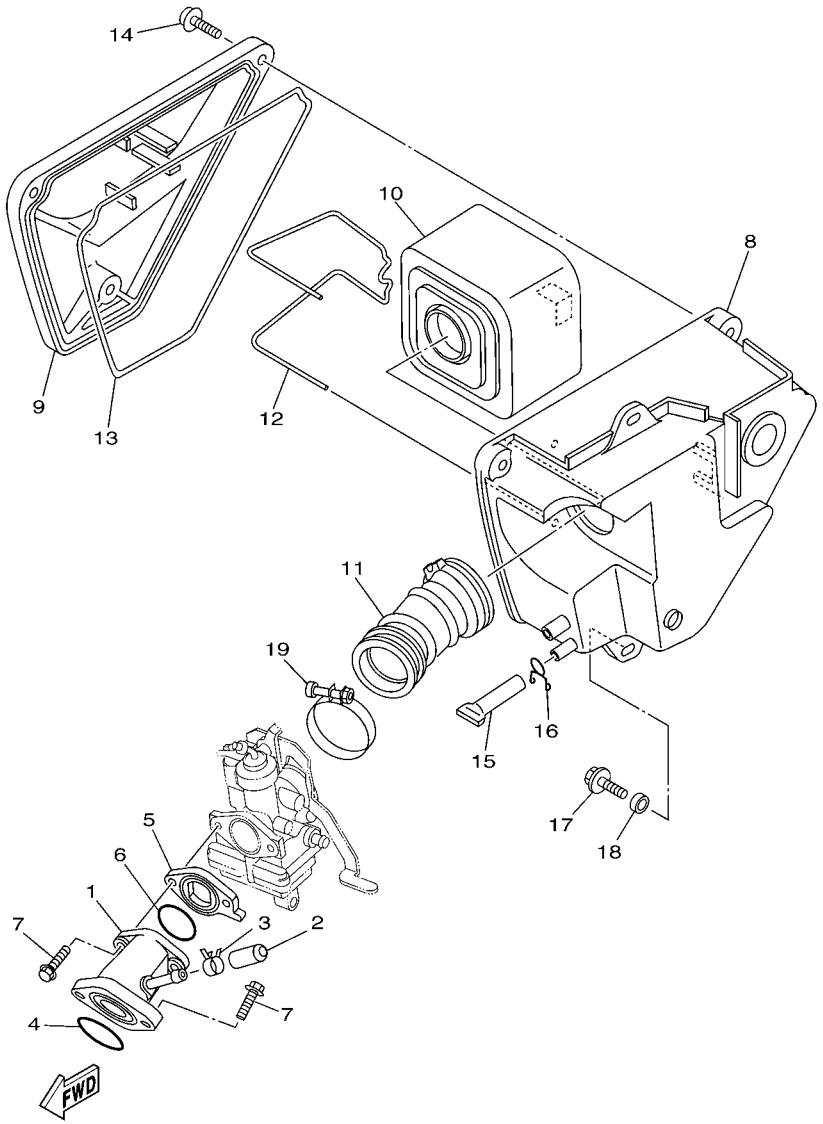

FIG. 6 INTAKE ADMISION

REF. NO.	PART NO. CODIGO Nº	DESCRIPTION DESCRIPCION	5C91					REMARKS OBSERVACIONES
1	5KA–E3586–10	JOINT, CARBURETOR 1 TOBERA DE CARBURADOR 1	1					
2	4LS–E3569–00	PLUG, BLIND TAPON CIEGO	1					
3	90467–10819	CLIP PRESILLA	1					
4	93210–32801	O-RING ANILLO O	1					
5	5KA–E3595–01	JOINT TOBERA	1					
6	93210–27802	O-RING ANILLO O	1					
7	95027–06025	BOLT, FLANGE PERNO, DE BRIDA	4					
8	5KA–E4411–00	CASE, AIR CLEANER 1 CAJA FILTRO DEL AIRE 1	1					
9	5DG–E4412–00	CAP, CLEANER CASE 1 TAPA CAJA DEL FILTRO 1	1					
10	5DG–E4450–00	ELEMENT ASSY, AIR CLEANER ELEMENTO COMP.FILTRO DE AIRE	1					
11	5KA–E4453–00	JOINT, AIR CLEANER 1 UNION DEL FILTRO DEL AIRE 1	1					
12	5DG–E4487–00	SPRING RESORTE	1					
13	4LS–E4462–00	SEAL SELLO	1					
14	97607–06225	SCREW,WITH WASHER TORNILLO CAB CON PLANA C/ARAN	3					
15	4LS–E443E–00	PIPE, DRAIN TUBO, DRENAJE	1					
16	90467–11106	CLIP PRESILLA	1					
17	90119–06108	BOLT, WITH WASHER TORNILLO CON ARANDELA	2					
18	90387–066K1	COLLAR ESPACIADOR	2					
19	90460–43053	CLAMP, HOSE BRIDA, DE UNION	1					

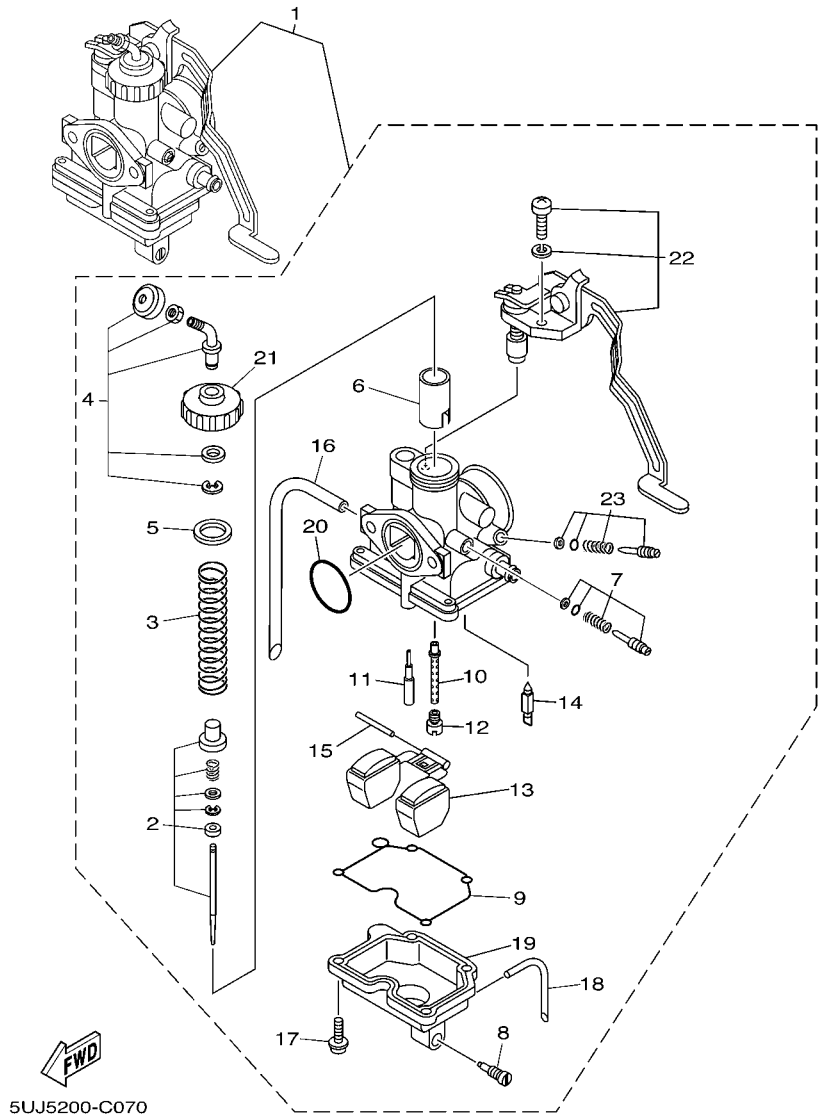

FIG. 7 CARBURETOR CARBURADOR

REF. NO.	PART NO. CODIGO Nº	DESCRIPTION DESCRIPCION	5C91					REMARKS OBSERVACIONES
1	5C9–E4101–00	CARBURETOR ASSY 1 CARBURADOR COMPLETO 1	1					
2	5KA–1490J–20	.NEEDLE SET .CJTO. AGUJA	1					
3	5KA–14131–00	.SPRING, THROTTLE VALVE .RESORTE VALVULA DE ACELERACIO	1					
4	5KA–14106–00	.CABLE ADJUST SCREW SET .TORNILLO AJUSTADOR DE CABLE	1					
5	4LS–14198–00	.GASKET .EMPAQUE	1					
6	5KA–14112–30	.VALVE, THROTTLE 1 .VALVULA DE ACELERACION 1	1					
7	5HH–14103–00	.THROTTLE SCREW SET .CJTO. TORNILLO DEL RALENTI	1					
8	4TL–14191–00	.PLUG, DRAIN .TORNILLO, DE DRENAJE	1					
9	5KA–14239–00	.SEAL .SELLO	1					
10	5KA–1414G–10	.PIPE, MAIN BREED .AEUJA DE CARB.	1					
11	2MM–14142–17	.JET, PILOT (# 17.5) .SURTIDOR DE RALENTI (# 17.5)	1					
12	5KA–14143–18	.JET, MAIN (# 90) .SURTIDOR, PRINCIPAL (# 90)	1					
13	5HH–14185–00	.FLOAT .BOYA	1					
14	5KA–14150–00	.NEEDLE ASSY .AGUJA DEL CARB.	1					
15	127–14186–00	.PIN, FLOAT .PASADOR DE LA BOYA	1					
16	5KA–14197–00	.PIPE .TUBO RESPIRADERO	1					
17	97607–04114	.SCREW,WITH WASHER .TORNILLO CAB CON PLANA C/ARAN	4					
18	3TU–14193–00	.PIPE .TUBO	1					
19	5KA–14181–00	.BODY, FLOAT CHAMBER 1 .CUERPO DE CAMARA DE BOIA	1					
20	241–14147–00	.O-RING .ANILLO O	1					
21	5KA–14158–00	.TOP, MIXING CHAMBER .TECHO DE CAMARA DE MEZCLA	1					
22	5KA–WF141–10	.STARTER ASSY 1 .ARRANQUE COMPLETO 1	1					
23	5KA–14104–00	.AIR SCREW SET .CJTO. TORNNILLO DE AIRE	1					

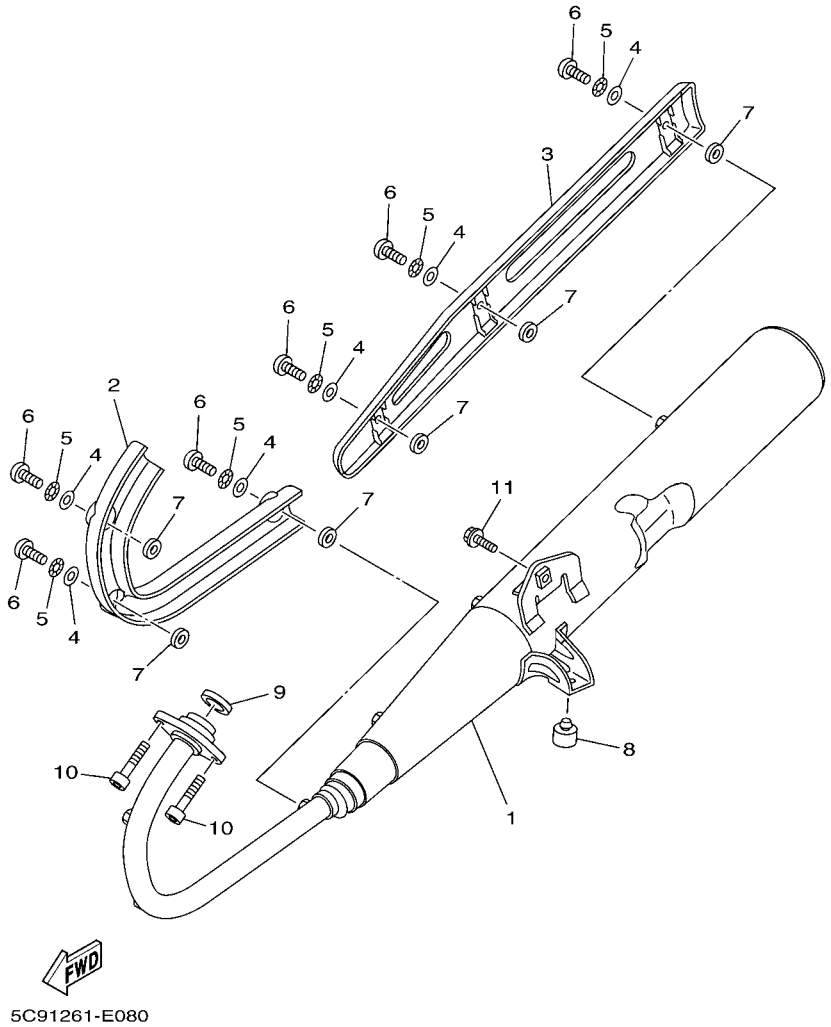

FIG. 8 EXHAUST DESCARGA

REF. NO.	PART NO. CODIGO Nº	DESCRIPTION DESCRIPCION	5C91					REMARKS OBSERVACIONES
1	5KA–E4703–21	MUFFLER COMP. 1 SILENCIADOR COMPL. 1	1					
2	5C9–E4628–00	PROTECTOR, EXHAUST PIPE PROTECTOR DE TUBO DE ESCAPE	1					
3	5C9–E4718–00	PROTECTOR, MUFFLER 1 PROTECTOR DE SILENCIADOR 1	1					
4	5TS–E4536–00	GASKET EMPAQUE	6					
5	90206–06090	WASHER, WAVE ARANDELA ONDULADA	6					
6	98980–06010	SCREW, BIND TORNILLO DE LIGAR	6					
7	5TS–E4537–00	GASKET EMPAQUE	6					
8	5C9–F7114–00	STOPPER, MAIN STAND TOPE DE PUNTAL PRINCIPAL	1					
9	5DG–E4613–00	GASKET, EXHAUST PIPE JUNTA, TUBO DE ESCAPE	1					
10	91317–06020	BOLT PERNO	2					
11	95807–08020	BOLT, FLANGE TORNILLO	1					

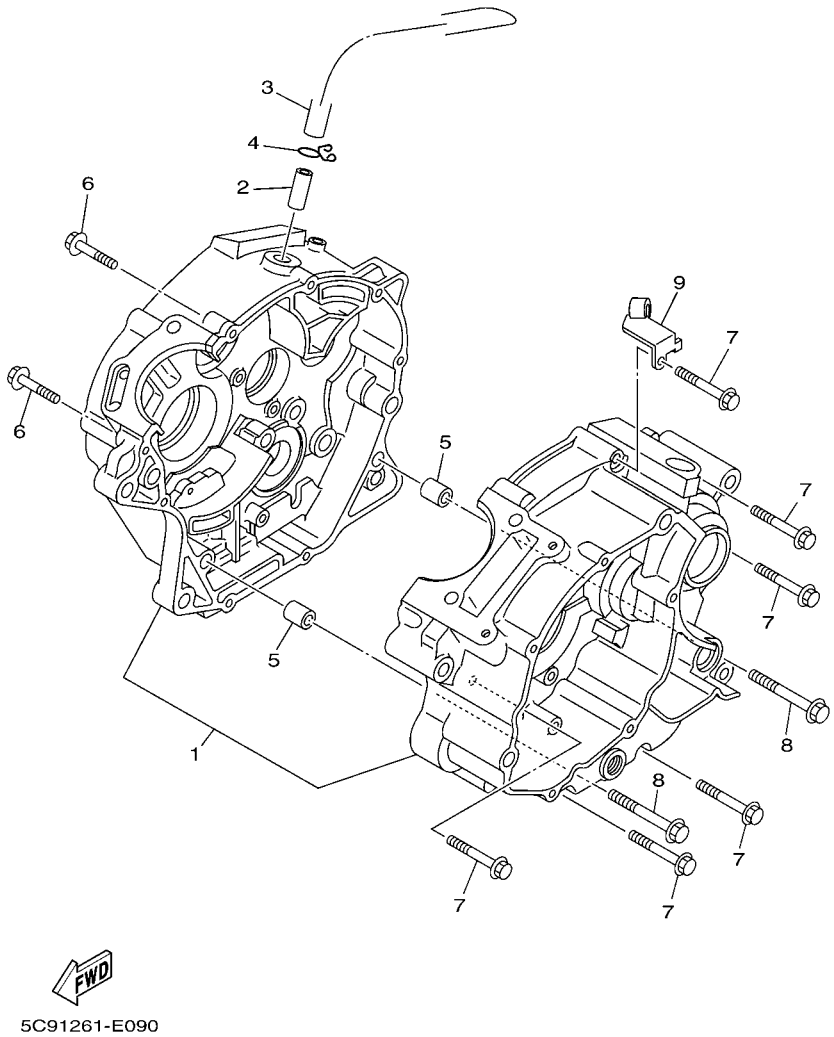

FIG. 9 CRANKCASE CARTER

REF. NO.	PART NO. CODIGO Nº	DESCRIPTION DESCRIPCION	5C91					REMARKS OBSERVACIONES
1	5TS–E5150–10	CRANKCASE ASSY CARTER COMPLETO	1					
2	5KA–E1167–00	PIPE, BREATHER 2 CUBIERTA RESPIRADERO 2	1					
3	5DG–E1166–00	PIPE, BREATHER 1 TUBO RESPIRADERO 1	1					
4	90467–13858	CLIP PRESILLA	1					
5	99530–10114	PIN, DOWEL PASADOR, DE ESPIGA	2					
6	90105–06802	BOLT, FLANGE TORNILLO	2					
7	90105–06800	BOLT, FLANGE TORNILLO	6					
8	90105–06801	BOLT, FLANGE TORNILLO	2					
9	4LS–E5441–00	HOLDER, CLUTCH CABLE SOSTEN DE CABLE DE EMBRAGUE	1					

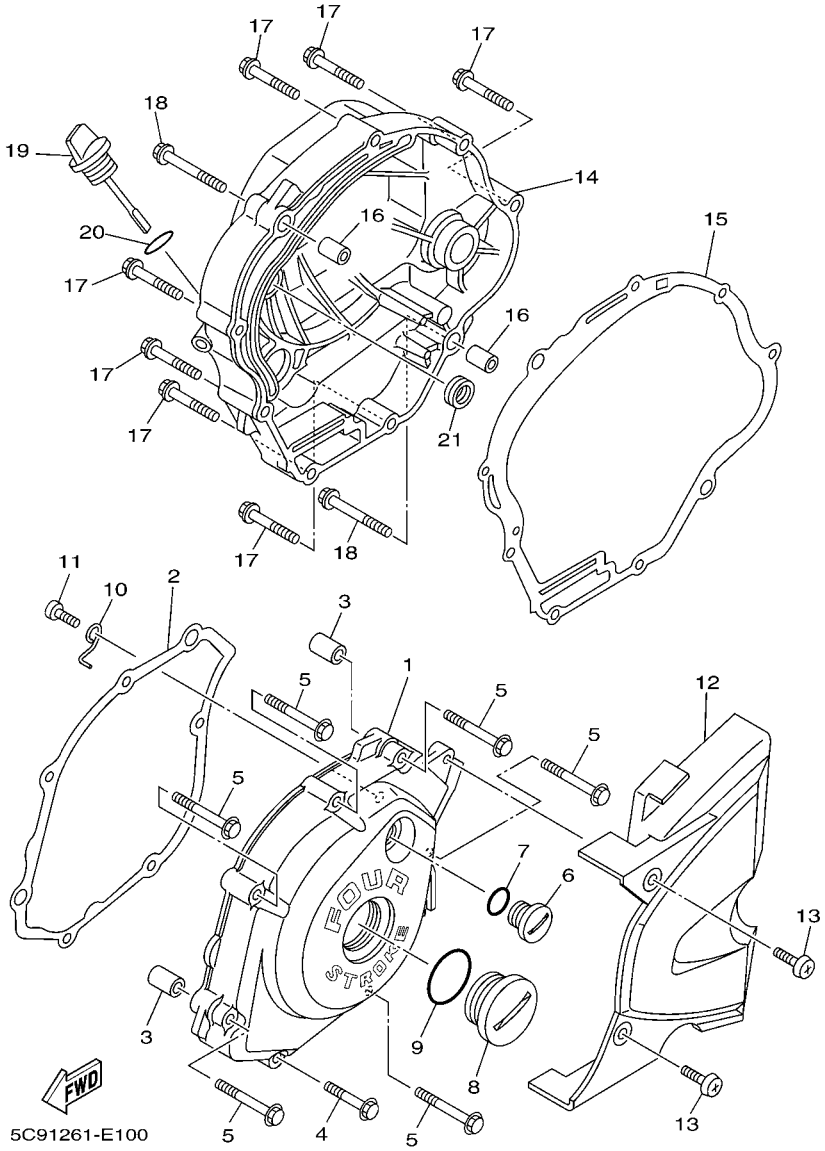

FIG. 10 CRANKCASE COVER 1 CUBIERTA DE CARTER 1

REF. NO.	PART NO. CODIGO Nº	DESCRIPTION DESCRIPCION	5C91					REMARKS OBSERVACIONES
1	5KA–E5411–20	COVER, CRANKCASE 1 CUBIERTA DE CARTER 1	1					
2	4LS–E5451–00	GASKET, CRANKCASE COVER 1 EMPAQ DE CUBIERTA DE CARTER	1					
3	99530–10114	PIN, DOWEL PASADOR, DE ESPIGA	2					
4	95027–06035	BOLT, FLANGE PERNO, DE BRIDA	1					
5	95027–06045	BOLT, FLANGE PERNO, DE BRIDA	6					
6	90340–14814	PLUG, STRAIGHT SCREW TORNILLO, DE DRENAJE	1					
7	93210–14899	O-RING ANILLO O	1					
8	90340–32808	PLUG, STRAIGHT SCREW TORNILLO, DE DRENAJE	1					
9	93210–328A4	O-RING ANILLO O	1					
10	5KA–E5191–20	PLATE PLACA	1					
11	98507–06010	SCREW, PAN HEAD TORNILLO DE CABEZA PLANA	1					
12	5DG–E5418–00	COVER, CHAIN CASE CUBIERTA CAJA DE CADENA	1					
13	98907–06016	SCREW, BIND TORNILLO DE LIGAR	2					
14	5TS–E5421–02	COVER, CRANKCASE 2 TAPA DE CARTER DERECHA	1					
15	4LS–E5461–01	GASKET, CRANKCASE COVER 2 JUNTA TAPA CARTER DERECHO 2	1					
16	99530–10114	PIN, DOWEL PASADOR, DE ESPIGA	2					
17	95027–06035	BOLT, FLANGE PERNO, DE BRIDA	7					
18	95027–06045	BOLT, FLANGE PERNO, DE BRIDA	2					
19	5KA–E5362–00	PLUG, OIL LEVEL TAPON DEL NIVEL DE ACEITE	1					
20	93210–19809	O-RING ANILLO O	1					
21	93101–10838	OIL SEAL SELLO ACEITE	1					

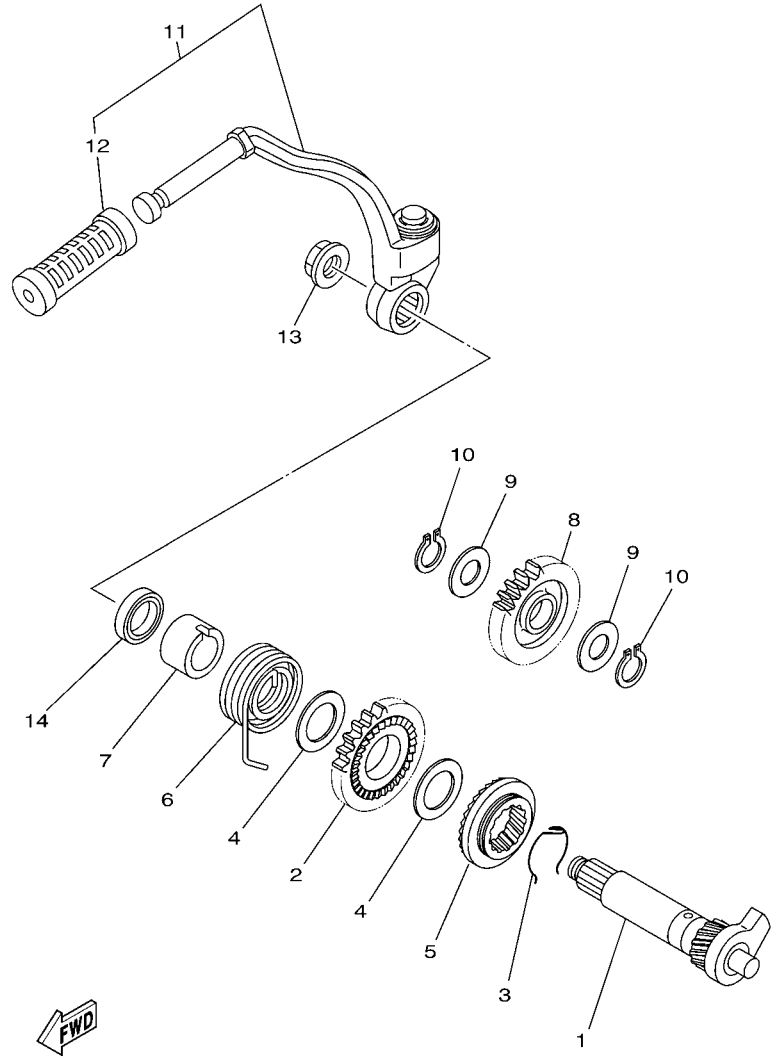

5C91261-E110

FIG. 11 STARTER ARRANQUE

REF. NO.	PART NO. CODIGO Nº	DESCRIPTION DESCRIPCION	5C91					REMARKS OBSERVACIONES
1	5YY–E5661–00	AXLE, KICK EJE DE PEDAL DE ARRANQUE	1					
2	5YY–E5641–00	GEAR, KICK (28T) ENGRANAJE PEDAL ARRANQUE (28T)	1					
3	90468–26048	CLIP PRESILLA	1					
4	90201–202L3	WASHER, PLATE (0.5T) ARANDELA DE PLACA(0.5T)	2					
5	5YY–E5671–00	WHEEL, RATCHET RUEDA DE TRINQUETE	1					
6	90508–26667	SPRING, TORSION RESORTE DE TORSION	1					
7	5YY–E5666–00	SPACER SEPARADOR	1					
8	5YY–E5651–01	GEAR, KICK IDLE PINON LIBRE, PEDAL ARRANQUE	1					
9	90201–15827	WASHER, PLATE ARANDELA PLANA	2					
10	99009–15400	CIRCLIP PRESILLA REDONDA	2					
11	5C9–E5620–00	KICK CRANK ASSY PEDAL DE ARRANQUE COMPLETO	1					
12	5VA–E5618–00	.COVER, KICK LEVER .GOMA PROTECTORA, PEDAL	1					
13	90179–12659	NUT TUERCA	1					
14	93109–20821	OIL SEAL SELLO ACEITE	1					

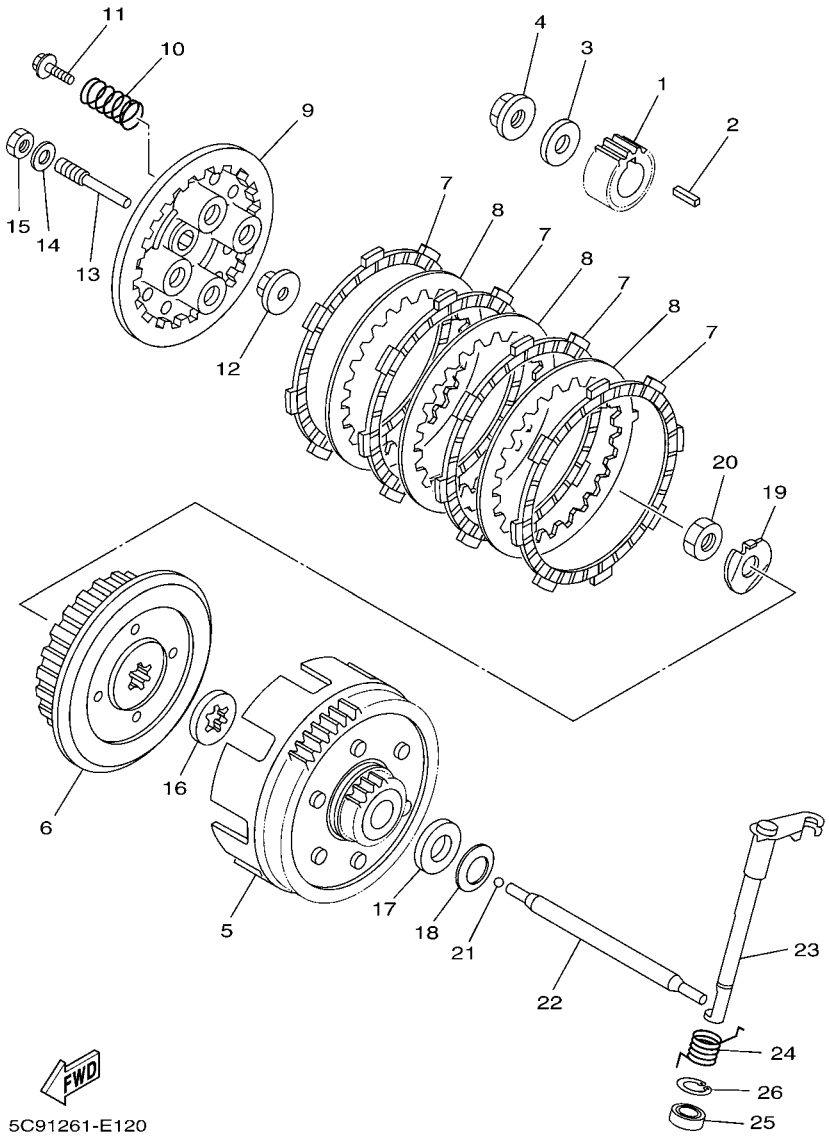

FIG. 12 CLUTCH EMBRAGUE

REF. NO.	PART NO. CODIGO Nº	DESCRIPTION DESCRIPCION	5C91					REMARKS OBSERVACIONES
1	5TS–E6111–10	GEAR, PRIMARY DRIVE ENGRANAJE TRACC.PRIMARIA	1					
2	90282–05001	KEY, STRAIGHT (5MMX16MM) CHAVETA, RECTA (5MMX16MM)	1					
3	90201–122H1	WASHER, PLATE ARANDELA PLANA	1					
4	90179–12659	NUT TUERCA	1					
5	5KA–E6150–00	PRIMARY DRIVEN GEAR COMP. CAMPANA DE EMBRAGUE	1					
6	5KA–E6371–00	BOSS, CLUTCH CUBO, DE EMBRAGUE	1					
7	5KA–E6321–00	PLATE, FRICTION PLACA DE FRICCION	4					
8	5RE–E6324–00	PLATE, CLUTCH 1 PLACA DE EMBRAGUE	3					
9	5KA–E6351–01	PLATE, PRESSURE 1 PLATO DE PRESION	1					
10	90501–216A6	SPRING, COMPRESSION RESORTE DE COMPRESION	4					
11	90119–05020	BOLT, WITH WASHER TORNILLO CON ARANDELA	4					
12	4LS–E6358–00	PLATE, PUSH PLACA DE EMPUJE	1					
13	4LS–E6356–00	ROD, PUSH 1 VARILLA DE EMPUJE 1	1					
14	92907–06200	WASHER ARANDELA	1					
15	95307–06600	NUT TUERCA	1					
16	5YY–E6154–00	PLATE, THRUST 1 ARANDELA, DE EMPUJE 1	1					
17	4LS–E6164–00	PLATE, THRUST 2 PLACA DE EMPUJE 2	1					
18	90208–17032	WASHER, CONICAL SPRING ARANDELA DE RESORTE CONICO	1					
19	90215–12815	WASHER, LOCK ARANDELA DE CIERRE	1					
20	90170–12060	NUT TUERCA	1					
21	93503–16807	BALL ESFERA	1					
22	5KA–E6357–00	ROD, PUSH 2 VARILLA DE EMPUJE 2	1					
23	4LS–E6381–00	PUSH LEVER COMP. CONJ. PALANCA DE EMPUJE	1					
24	90508–14857	SPRING, TORSION RESORTE DE TORSION	1					
25	93102–12877	OIL SEAL SELLO ACEITE	1					
26	99009–20500	CIRCLIP PRESILLA REDONDA	1					

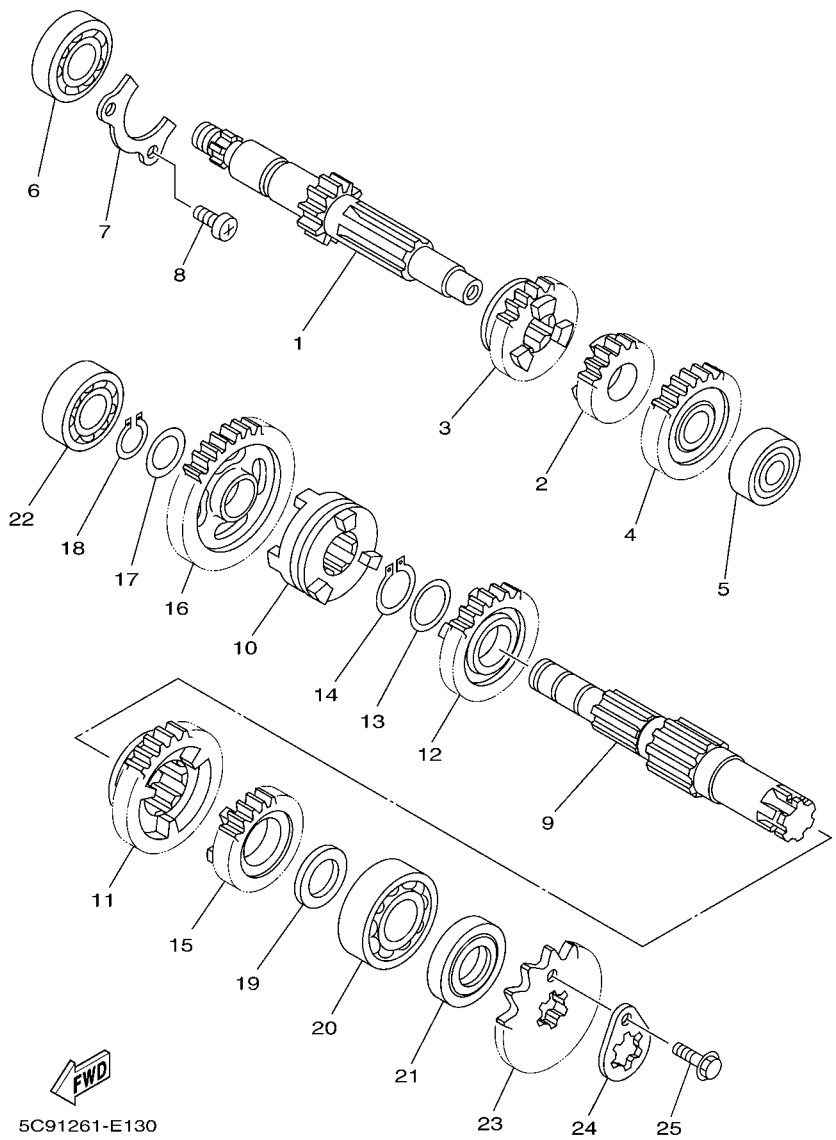

FIG. 13 TRANSMISSION TRANSMISION

REF. NO.	PART NO. CODIGO Nº	DESCRIPTION DESCRIPCION	5C91					REMARKS OBSERVACIONES
1	5KA–E7411–00	AXLE, MAIN (11T) EJE PRIMARIO (11T)	1					
2	4LS–E7121–02	GEAR, 2ND PINION (16T) ENGRANAJE DE PINON DE 2DA (16	1					
3	4LS–E7131–00	GEAR, 3RD PINION (20T) ENGRANAJE PINON DE 3RA (20T)	1					
4	4LS–E7141–00	GEAR, 4TH PINION (23T) ENGRANAJE PINON DE 4TA (23T)	1					
5	93306–201Y4	BEARING COJINETE	1					
6	93306–203X2	BEARING COJINETE	1					
7	4LS–E7471–00	PLATE, COVER PLACA, DE CUBIERTA	1					
8	98507–06014	SCREW, PAN HEAD TORNILLO DE CABEZA CON PLANA	2					
9	4LS–E7402–01	DRIVE AXLE ASSY EJE DE TRACCION COMPLETO	1					
10	4LS–E7285–00	CLUTCH, DOG ENGRENAJE DE ENGATE	1					
11	4LS–E7221–00	GEAR, 2ND WHEEL (27T) ENGRANAJE RUEDA DE 2DA (27T)	1					
12	4LS–E7231–00	GEAR, 3RD WHEEL (24T) ENGRANAJE RUEDA DE 3RA (24T)	1					
13	90201–20266	WASHER, PLATE (T=1.0) ARANDELA, PLACA (T=1.0)	1					
14	93410–20038	CIRCLIP SEGURO	1					
15	4LS–E7241–00	GEAR, 4TH WHEEL (21T) ENGRANAJE DE RUEDA 4TA (21T)	1					
16	5KA–E7211–01	GEAR, 1ST WHEEL (33T) ENGRANAJE RUEDA DE 1 RA (33T)	1					
17	90201–15700	WASHER, PLATE ARANDELA PLANA	1					
18	99009–15400	CIRCLIP PRESILLA REDONDA	1					
19	90201–127E1	WASHER, PLATE ARANDELA PLANA	1					
20	93306–204Y6	BEARING COJINETE	1					
21	93102–20876	OIL SEAL SELLO ACEITE	1					
22	93306–202X6	BEARING COJINETE	1					
23	93822–14800	SPROCKET, DRIVE (14T) CORONA (14T)	1					
24	4LS–E7456–00	HOLDER, SPROCKET SOPORTE DE CORONA	1					
25	95027–06010	BOLT, FLANGE PERNO, DE BRIDA	1					

FIG. 14 SHIFT CAM & FORK — LEVA DE CAMBIO & HORQUILLA

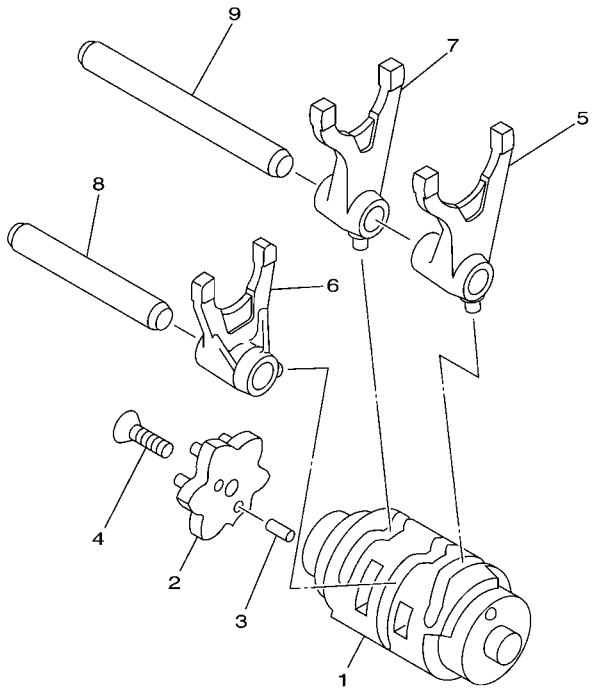

4LS1470-8140

REF. NO.	PART NO. CODIGO Nº	DESCRIPTION DESCRIPCION	5C91					REMARKS OBSERVACIONES
1	4LS–E8540–01	SHIFT CAM ASSY LEVA DEL CAMBIO COMPLETA	1					
2	4LS–E8185–00	SEGMENT SEGMENTO DE RETENCION	1					
3	93604–10011	PIN, DOWEL PASADOR DE CLAVIJA	2					
4	90151–06801	SCREW, COUNTERSUNK TORNILLO EMBUTIDO	1					
5	4LS–E8511–00	FORK, SHIFT 1 HORQUILLA DEL CAMBIO 1	1					
6	4LS–E8512–00	FORK, SHIFT 2 HORQUILLA DEL CAMBIO 2	1					
7	4LS–E8513–00	FORK, SHIFT 3 HORQUILLA DEL CAMBIO 3	1					
8	36L–E8531–00	BAR, SHIFT FORK GUIDE 1 BARRA GUIA HORQ. CAMBIO 1	1					
9	36L–E8535–00	BAR, SHIFT FORK GUIDE 2 BARRA GUIA HORQ .CAMBIO 2	1					

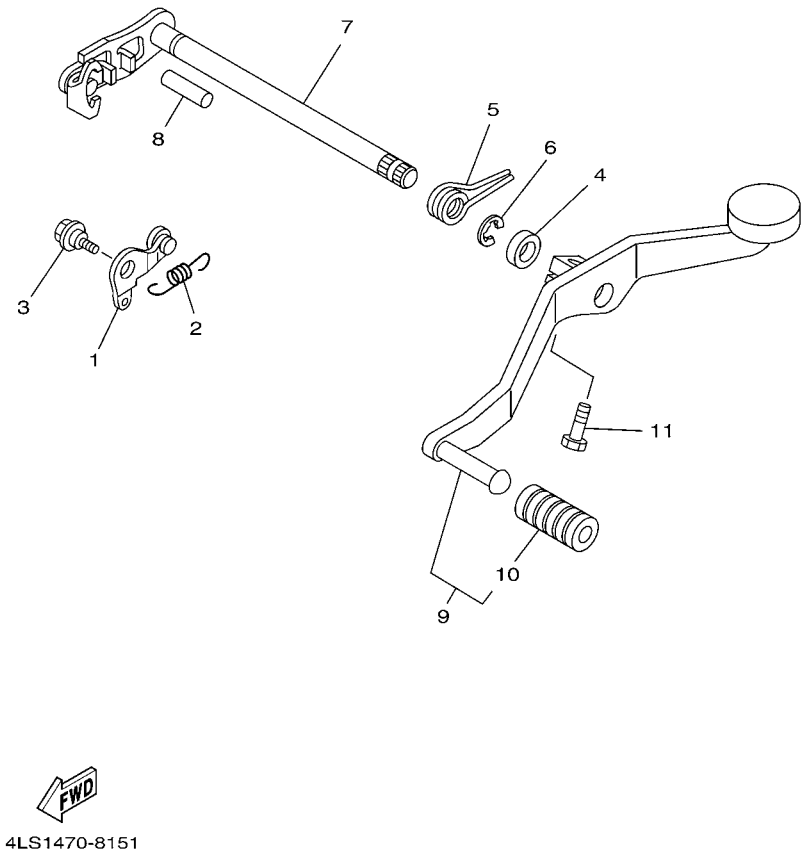

FIG. 15 SHIFT SHAFT — EJE DE CAMBIO & PEDAL

REF. NO.	PART NO. CODIGO Nº	DESCRIPTION DESCRIPCION	5C91					REMARKS OBSERVACIONES
1	4LS–E8140–01	STOPPER LEVER ASSY PALANCA DE TOPE COMPLETA	1					
2	4LS–E8337–00	SPRING RESORTE	1					
3	90109–06806	BOLT PERNO	1					
4	93102–12875	OIL SEAL SELLO ACEITE	1					
5	90508–32837	SPRING, TORSION RESORTE DE TORSION	1					
6	99001–10600	CIRCLIP PRESILLA REDONDA	1					
7	4LS–E8101–01	SHIFT SHAFT ASSY EJE SELECTOR COMPLETO	1					
8	93608–30839	PIN, DOWEL PASADOR DE CLAVIJA	1					
9	5C9–E8110–00	SHIFT PEDAL ASSY PEDAL DE CAMBIO COMPLETO	1					
10	5VA–E8113–00	.COVER, SHIFT PEDAL .FUNDA DEL PEDAL DEL CAMBIO	1					
11	97027–06020	BOLT PERNO	1					

FIG. 16 FRAME CUADRO

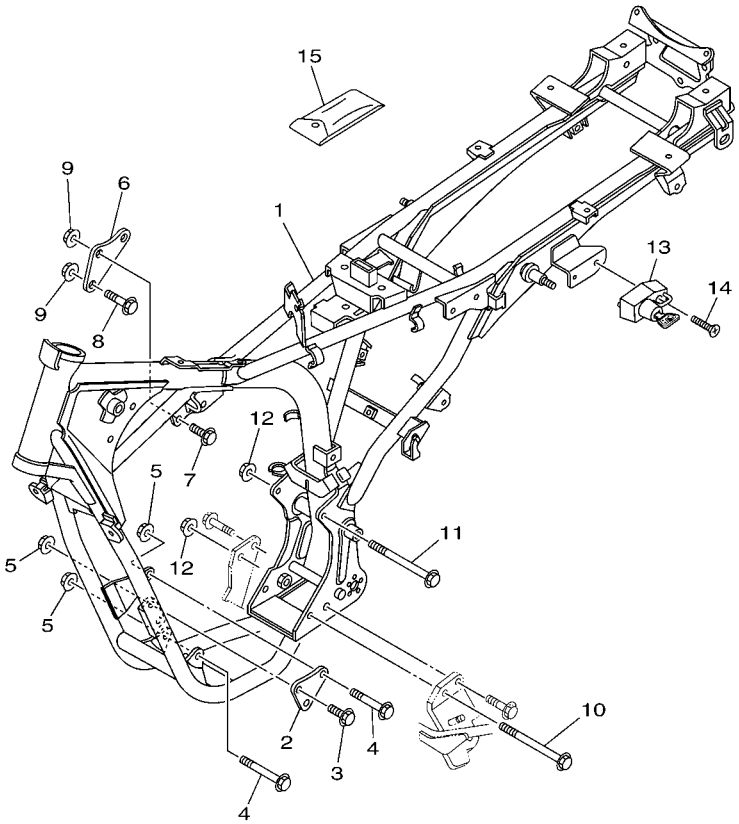

5C91261-E160

REF. NO.	PART NO. CODIGO Nº	DESCRIPTION DESCRIPCION	5C91					REMARKS OBSERVACIONES
1	5C9–F1110–00	FRAME COMP. ARMAZON COMPLETO	1					
2	5DG–F1316–00	STAY, ENGINE 3 SOPORTE DE MOTOR 3	1					
3	90105–08809	BOLT, FLANGE TORNILLO	2					
4	90105–088A6	BOLT, FLANGE TORNILLO	2					
5	95707–08500	NUT, FLANGE TUERCA DE BRIDA	4					
6	5KA–F1318–00	STAY, ENGINE 5 SOPORTE DE MOTOR 5	1					
7	90105–08809	BOLT, FLANGE TORNILLO	2					
8	90105–08002	BOLT, FLANGE TORNILLO	1					
9	95707–08500	NUT, FLANGE TUERCA DE BRIDA	3					
10	90105–08006	BOLT, FLANGE TORNILLO	1					
11	90105–08007	BOLT, FLANGE TORNILLO	1					
12	95707–08500	NUT, FLANGE TUERCA DE BRIDA	2					
13	36L–F1398–01	HANGER, HELMET COLGADOR DE CASCO	1					
14	9870N–06030	SCREW, FLAT HEAD TORNILLO DE CABEZA PLANA	1					
15	5C9–F8100–00	TOOL KIT JUEGO DE HERRAMIENTAS	1					

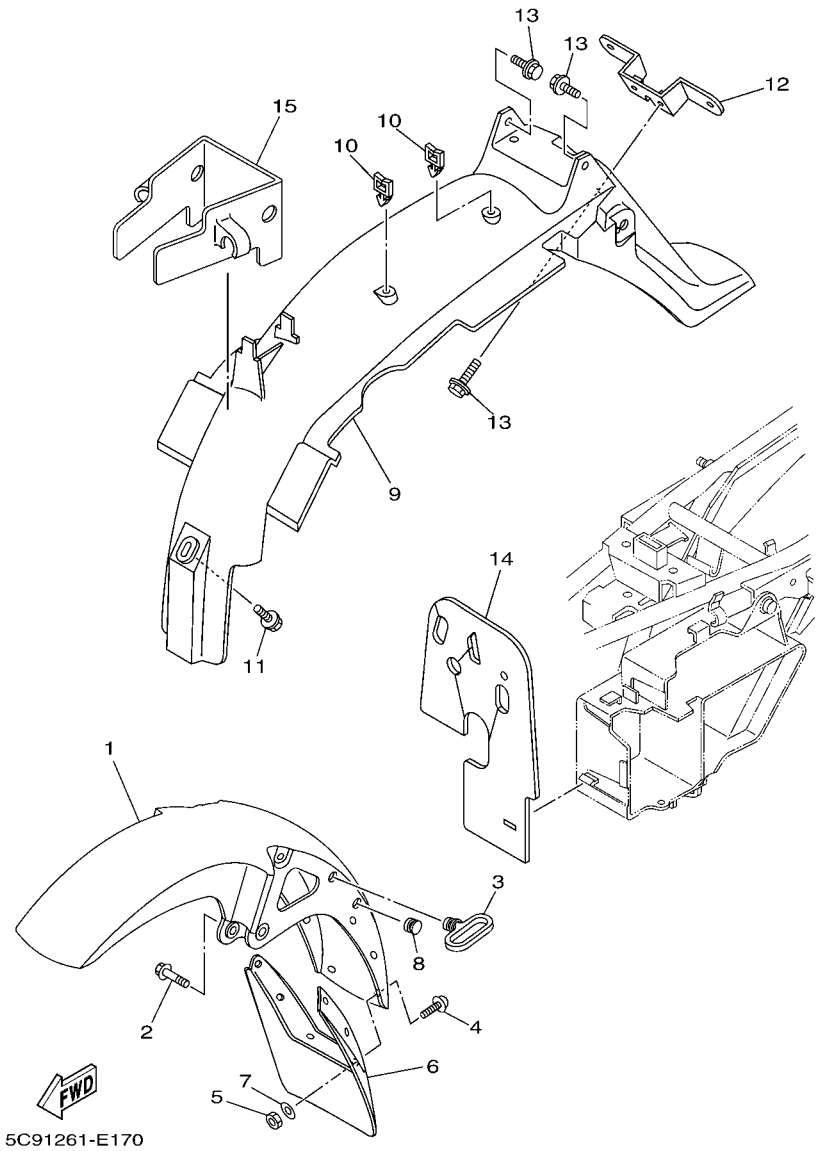

FIG. 17 FENDER GUARDABARRO

REF. NO.	PART NO. CODIGO Nº	DESCRIPTION DESCRIPCION	5C91					REMARKS OBSERVACIONES
1	5C9–F1510–00–33	FRONT FENDER COMP. GUARDABARRO DELANTERO COMPLETO	1					UR YB UR YB
	5C9–F1510–00–H6	FRONT FENDER COMP. GUARDABARRO DELANTERO COMPLETO	1					UR CNM UR CNM
	5C9–F1510–00–P0	FRONT FENDER COMP. GUARDABARRO DELANTERO COMPLETO	1					UR S3 UR S3
	5C9–F1510–00–P1	FRONT FENDER COMP. GUARDABARRO DELANTERO COMPLETO	1					UR DPBMC UR DPBMC
2	95817–06016	BOLT, FLANGE TORNILLO	4					
3	5DG–F1518–00	HOLDER, CABLE SOPORTE DE CABLE	1					
4	9760N–05214	SCREW, PAN HEAD WITH WASHER TORNILLO CAB CON PLANA C/ARAN	6					
5	9530N–05600	NUT TUERCA	6					
6	4LS–F1521–00	FLAP, FRONT FENDER CHARNELA DE GUARDABARRO	1					
7	90202–05031	WASHER, PLATE ARANDELA DE PLANA	6					
8	5DG–F1575–00	SEAL 1 SELLO 1	1					
9	5DG–F1611–03	FENDER, REAR GUARDABARRO TRASERO	1					
10	90464–10829	CLAMP BRIDA	2					
11	90119–06108	BOLT, WITH WASHER TORNILLO CON ARANDELA	1					
12	5C9–F1685–00	BRACKET, LICENSE SOPORTE DE LICENCIA	1					
13	90119–06108	BOLT, WITH WASHER TORNILLO CON ARANDELA	4					
14	5KA–F177F–10	COVER CUBIERTA	1					
15	5DG–F1621–00	FLAP CHARNELA	1					

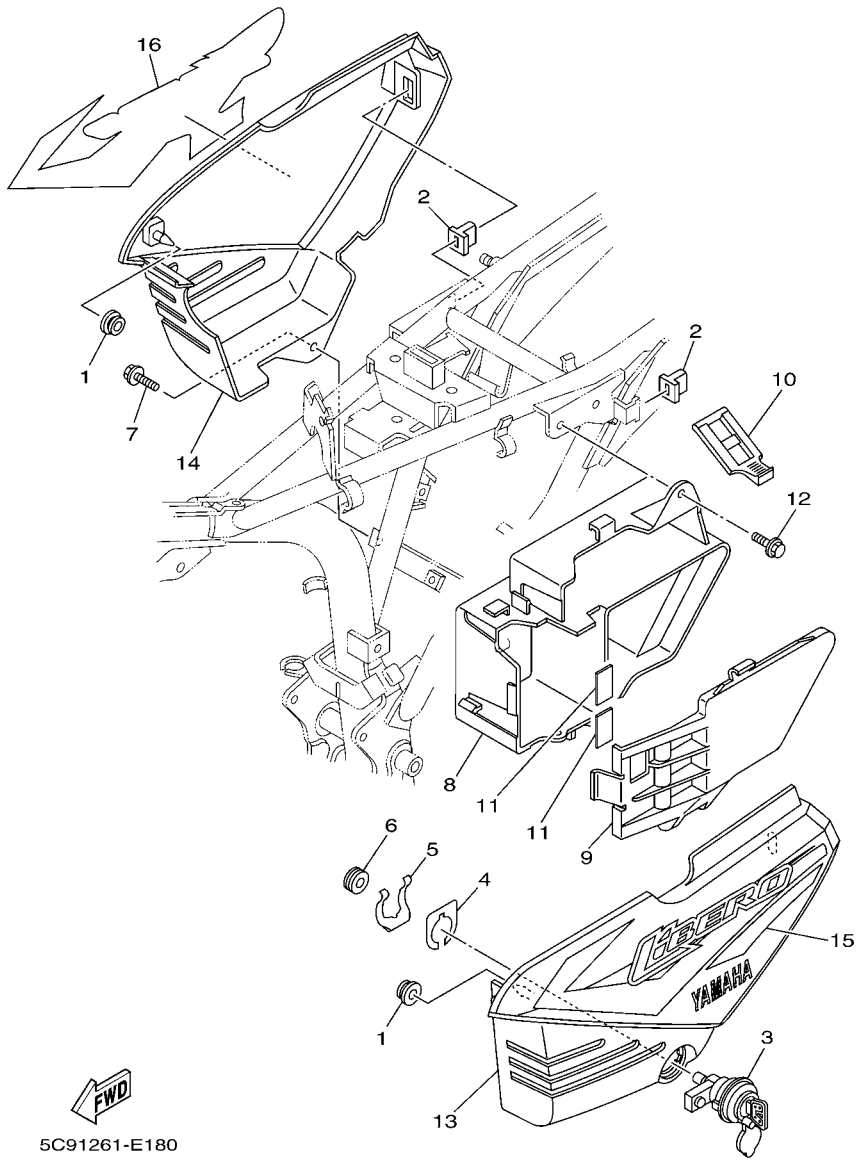

FIG. 18 SIDE COVER — CUBIERTA LATERAL

REF. NO.	PART NO. CODIGO Nº	DESCRIPTION DESCRIPCION	5C91					REMARKS OBSERVACIONES
1	90480–13426	GROMMET TAPON	2					
2	5DG–F1778–00	DAMPER, LOCATING 1 AMORTIGUADOR DE MONTAJE	2					
3	5KA–F8490–01	LOCK ASSY 2 CUBIERTA 2	1					
4	36L–H398X–00	WASHER, PLATE ARANDELA DE PLANA	1					
5	5KA–F176V–00	SPRING, LOCK 2 RESORTE, CERRADURA 2	1					
6	5KA–F1717–00	DAMPER AMORTIGUADOR	1					
7	90119–06843	BOLT, WITH WASHER TORNILLO CON ARANDELA	1					
8	5DG–F177G–00	BOX, BATTERY CAJA DE BATERIA	1					
9	5DG–F177E–00	LID TAPA	1					
10	5KA–F179E–00	BAND BANDA	1					
11	5KA–F1747–00	DAMPER AMORTIGUADOR	2					
12	90119–06108	BOLT, WITH WASHER TORNILLO CON ARANDELA	2					
13	5C9–F1711–00	COVER, SIDE 1 CUBIERTA LATERAL 1	1					
14	5C9–F1721–00	COVER, SIDE 2 CUBIERTA LATERAL 2	1					
15	5C9–F173E–30	GRAPHIC 1 GRAFICO 1	1					UR FOR YB UR PARA YB
	5C9–F173E–40	GRAPHIC 1 GRAFICO 1	1					UR FOR CNM UR PARA CNM
	5C9–F173E–50	GRAPHIC 1 GRAFICO 1	1					UR FOR S3 UR PARA S3
	5C9–F173E–60	GRAPHIC 1 GRAFICO 1	1					UR FOR DPBMC UR PARA DPBMC
16	5C9–F173F–30	GRAPHIC 2 GRAFICO 2	1					UR FOR YB UR PARA YB
	5C9–F173F–40	GRAPHIC 2 GRAFICO 2	1					UR FOR CNM UR PARA CNM
	5C9–F173F–50	GRAPHIC 2 GRAFICO 2	1					UR FOR S3 UR PARA S3
	5C9–F173F–60	GRAPHIC 2 GRAFICO 2	1					UR FOR DPBMC UR PARA DPBMC

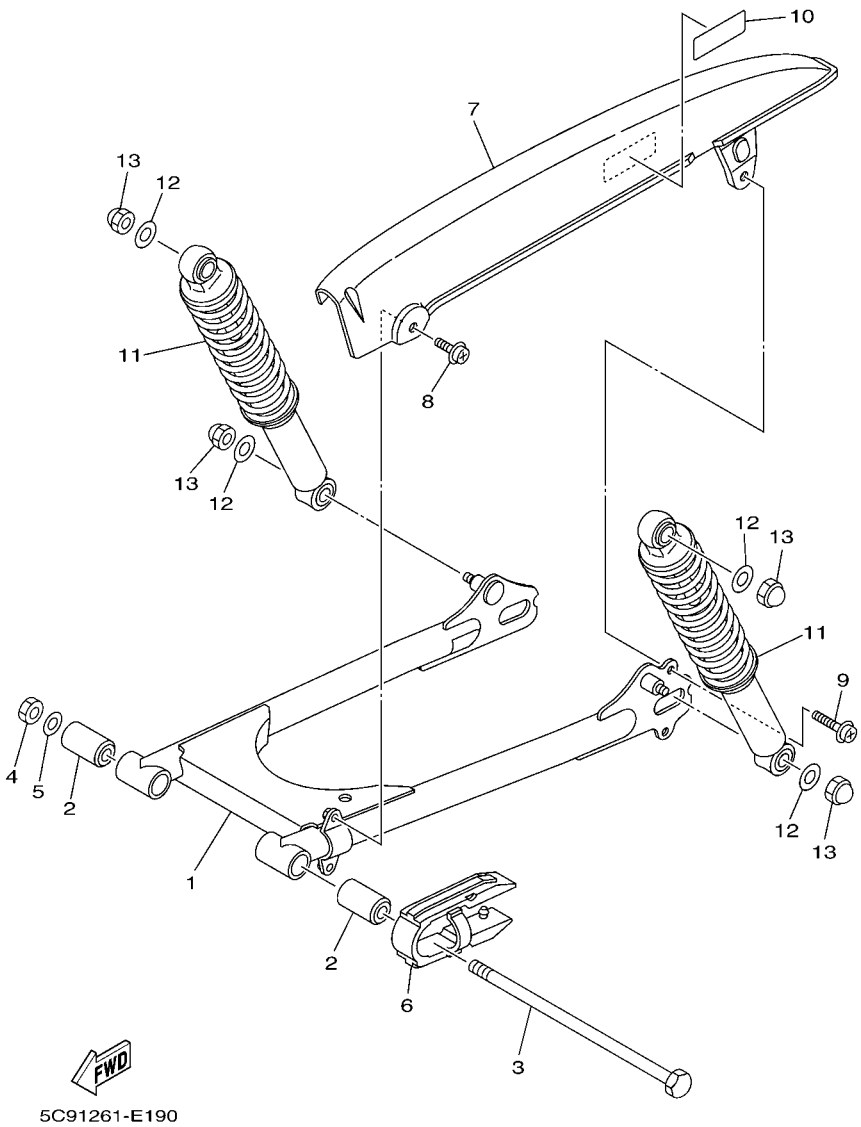

FIG. 19 REAR ARM & SUSPENSION BRAZO TRASERO & SUSPENSION

REF. NO.	PART NO. CODIGO Nº	DESCRIPTION DESCRIPCION	5C91					REMARKS OBSERVACIONES
1	5C9–F2110–00	REAR ARM COMP. BRAZO TRASERO COMPLETO	1					
2	36L–F2123–00	BUSH 1 BUJE 1	2					
3	4LS–F2141–00	SHAFT, PIVOT EJE DEL BARCULANTE	1					
4	90170–12065	NUT TUERCA	1					
5	9290N–12200	WASHER ARANDELA	1					
6	4LS–F2151–00	SEAL, GUARD SELLO DE GUARDA	1					
7	5JV–F2310–00	CHAIN CASE ASSY CAJA DE CADENA COMPLETA	1					
8	9760N–06212	SCREW, PAN HEAD WITH WASHER TORNILLO CAB CON PLANA C/ARAN	1					
9	9760N–06216	SCREW, PAN HEAD WITH WASHER TORNILLO CAB CON PLANA C/ARAN	1					
10	5C9–F1668–00	LABEL, TIRE ETIQUETA DE FRANJA	1					
11	5KA–F2210–30	SHOCK ABSORBER ASSY, REAR AMORTIGUADOR TRASERO COMPLETO	2					
12	90201–106F2	WASHER, PLATE ARANDELA PLANA	4					
13	90176–10073	NUT, CROWN TUERCA CORONA	4					

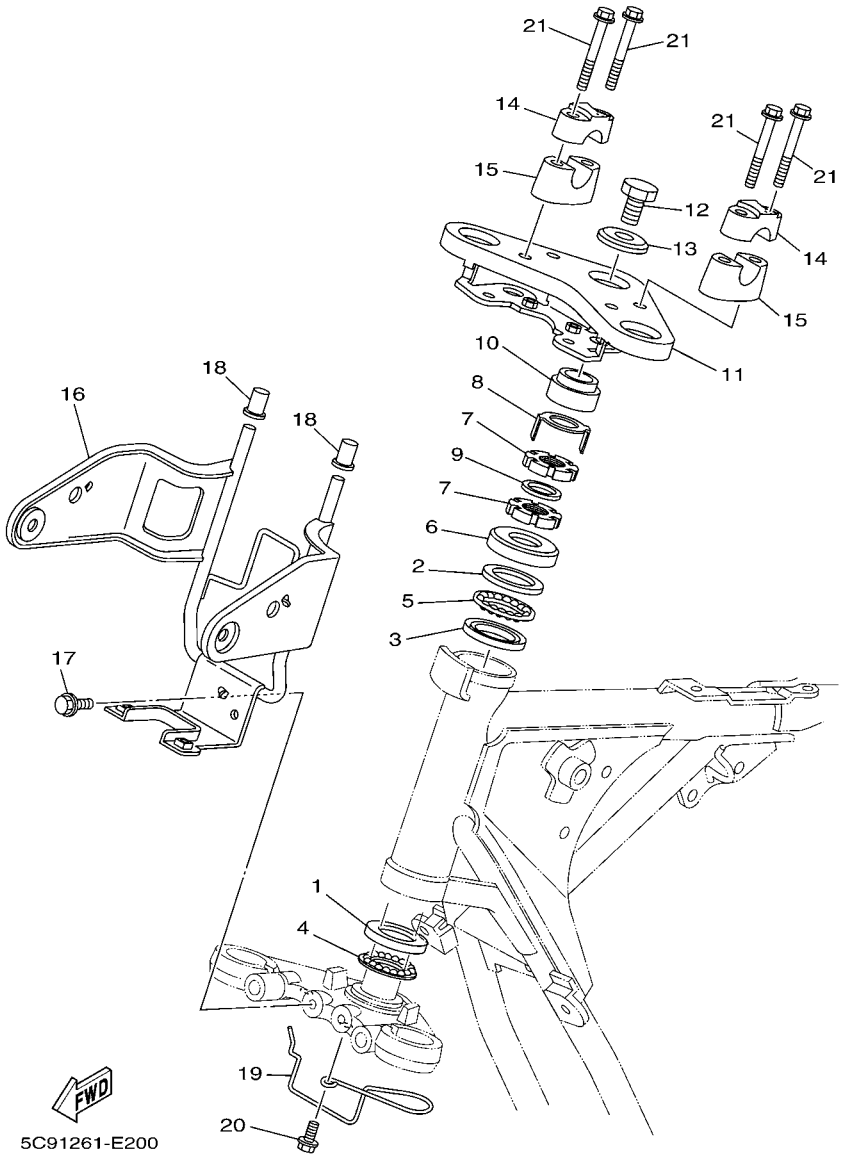

FIG. 20 STEERING DIRECCION

REF. NO.	PART NO. CODIGO Nº	DESCRIPTION DESCRIPCION	5C91					REMARKS OBSERVACIONES
1	5KA–F3412–00	RACE, BALL 2 PISTA DE BOLAS 2	1					
2	5KA–F3413–00	RACE, BALL 3 BASE DE BOLA 3	1					
3	5KA–F3414–00	RACE, BALL 4 BASE DE BOLA 4	1					
4	4LS–F341E–10	RETAINER, BALL BEARING RETEN DE COJINETE	1					UR UR
	5US–F341E–00	RETAINER, BALL BEARING RETEN DE COJINETE	1					UR UR
5	4LS–F341E–00	RETAINER, BALL BEARING RETEN DE COJINETE	1					UR UR
	5KA–F341E–00	RETAINER, BALL BEARING RETEN DE COJINETE	1					UR UR
6	36L–F3416–00	COVER, BALL RACE 2 CUBIERTA DE BASE DE BOLA 2	1					
7	90179–25033	NUT TUERCA	2					
8	4LS–F3418–00	WASHER, SPECIAL ARANDELA ESPECIAL	1					
9	90202–26142	WASHER, PLATE ARANDELA DE PLANA	1					
10	5KA–F3448–10	SPACER ESPACIADOR	1					
11	5KA–F3435–10	CROWN, HANDLE PLATINA SUPERIOR	1					
12	90101–10437	BOLT TORNILLO	1					
13	90209–10160	WASHER ARANDELA DE SEPARACION	1					
14	5TS–F3441–01	HOLDER, HANDLE UPPER SOPORTE DE MANUBRIO	2					
15	5TS–F3442–00	HOLDER, HANDLE LOWER SOPORTE DE MANUBRIO INFERIOR	2					
16	5C9–F3174–00	STAY, HEADLIGHT SOPORTE DEL FARO DELANTERO	1					
17	9582N–06016	BOLT, FLANGE TORNILLO	2					
18	4LS–F317J–00	DAMPER 1 AMORTIGUADOR 1	2					
19	5KA–F3466–01	CLAMP GRAMPA	1					
20	9580N–06016	BOLT, FLANGE TORNILLO	1					
21	95024–08050	BOLT, FLANGE PERNO, DE BRIDA	4					

FIG. 21 FRONT FORK HORQUILLA DELANTERA

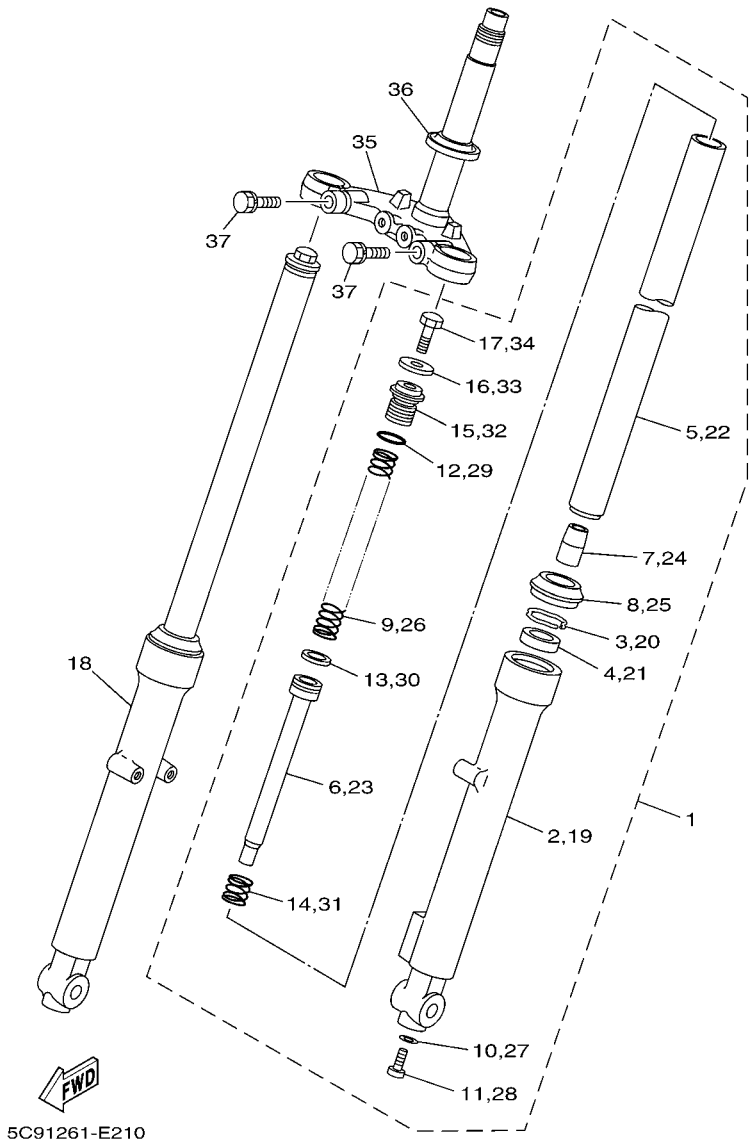

REF. NO.	PART NO. CODIGO Nº	DESCRIPTION DESCRIPCION	5C91					REMARKS OBSERVACIONES
1	5KA–F3102–30	FRONT FORK ASSY (L.H) HORQUILLA DELANTERA COMPL.(MI)	1					
2	4LS–F3126–00	.TUBE, OUTER (LEFT) .TUBO EXTERIOR (IZQUIERDO)	1					
3	4LS–F3153–00	.RING, SNAP .ANILLO DE ENGANCHE	1					
4	4LS–F3145–00	.OIL SEAL .RETEN DE ACEITE	1					
5	5KA–F3110–10	.INNER TUBE COMP.1 .TUBO INTERIOR COMPLETO 1	1					
6	5KA–F3170–00	.CYLINDER COMP., FRONT FORK .CILINDRO COMPL DE HORQ DELAN	1					
7	36L–F3173–00	.SPINDLE, TAPER .VASTAGO AHUSADO	1					
8	4LS–F3144–00	.SEAL, DUST .GUARDAPOLVO	1					
9	5KA–F3141–10	.SPRING, FRONT FORK .RESORTE HORQUILLA DELANT.	1					
10	36L–F3158–00	.GASKET .EMPAQUE	1					
11	36L–F3181–00	.BOLT, HEXAGON SOCKET HEAD .TORNILLO CABEZAHEXAGONAL	1					
12	5KA–F3147–00	.O-RING .ARO	1					
13	36L–F3157–00	.RING, PISTON .ANILLO DEL PISTON	1					
14	36L–F3152–00	.SPRING, SUB .RESORTE DE SUBENSAMBLE	1					
15	5KA–F312G–00	.PLUG .TAPON	1					
16	5KA–F3165–00	.WASHER, FELT .ARANDELA DE FIELTRO	1					
17	5KA–F3394–00	.BOLT, SPECIAL .PERNO ESPECIAL	1					
18	5KA–F3103–30	FRONT FORK ASSY (R.H) HORQUILLA DELANTERA COMPL.(MD)	1					
19	4LS–F3136–00	.TUBE, OUTER (RIGHT) .TUBO EXTERIOR	1					
20	4LS–F3153–00	.RING, SNAP .ANILLO DE ENGANCHE	1					
21	4LS–F3145–00	.OIL SEAL .RETEN DE ACEITE	1					
22	5KA–F3110–10	.INNER TUBE COMP.1 .TUBO INTERIOR COMPLETO 1	1					
23	5KA–F3170–00	.CYLINDER COMP., FRONT FORK .CILINDRO COMPL DE HORQ DELAN	1					
24	36L–F3173–00	.SPINDLE, TAPER .VASTAGO AHUSADO	1					
25	4LS–F3144–00	.SEAL, DUST .GUARDAPOLVO	1					
26	5KA–F3141–10	.SPRING, FRONT FORK .RESORTE HORQUILLA DELANT.	1					
27	36L–F3158–00	.GASKET .EMPAQUE	1					

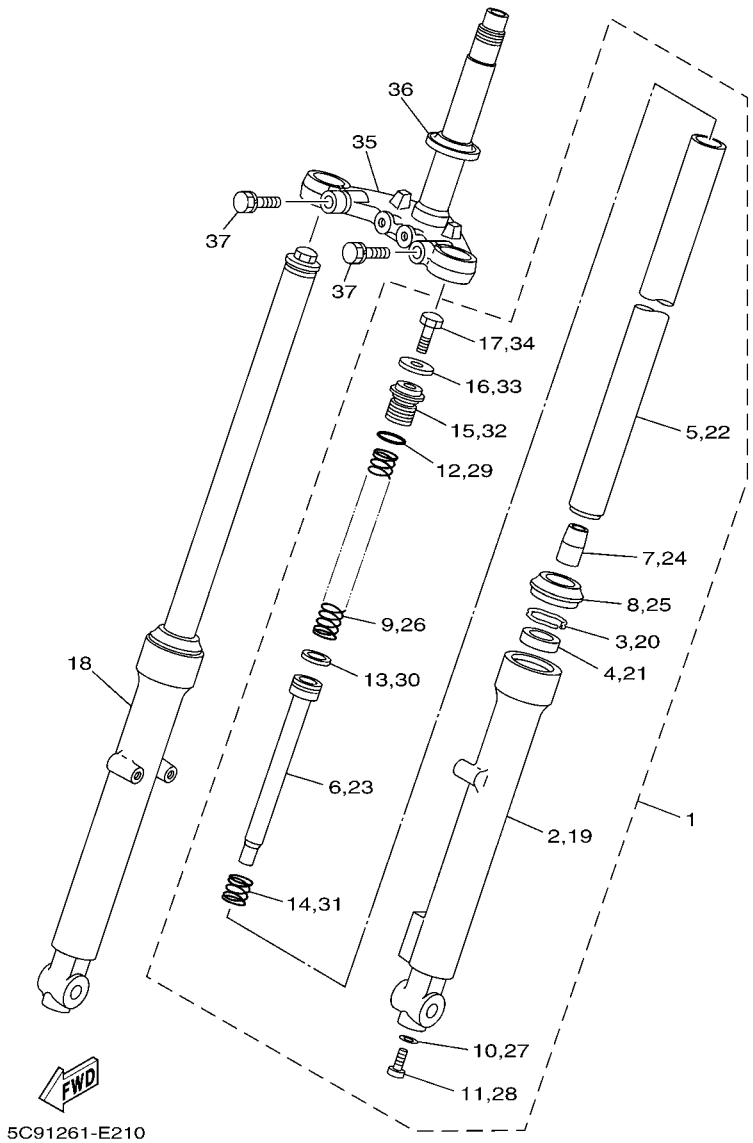

FIG. 21 FRONT FORK — HORQUILLA DELANTERA

REF. NO.	PART NO. CODIGO Nº	DESCRIPTION DESCRIPCION	5C91					REMARKS OBSERVACIONES
28	36L–F3181–00	.BOLT, HEXAGON SOCKET HEAD .TORNILLO CABEZAHEXAGONAL	1					
29	5KA–F3147–00	.O-RING .ARO	1					
30	36L–F3157–00	.RING, PISTON .ANILLO DEL PISTON	1					
31	36L–F3152–00	.SPRING, SUB .RESORTE DE SUBENSAMBLE	1					
32	5KA–F312G–00	.PLUG .TAPON	1					
33	5KA–F3165–00	.WASHER, FELT .ARANDELA DE FIELTRO	1					
34	5KA–F3394–00	.BOLT, SPECIAL .PERNO ESPECIAL	1					
35	5KA–F3340–00	UNDER BRACKET COMP. PLATINA INFERIOR COMPLETA	1					
36	5KA–F3411–00	RACE, BALL 1 PISTA DE BOLAS 1	1					
37	36L–F3346–01	BOLT 1 PERNO 1	2					

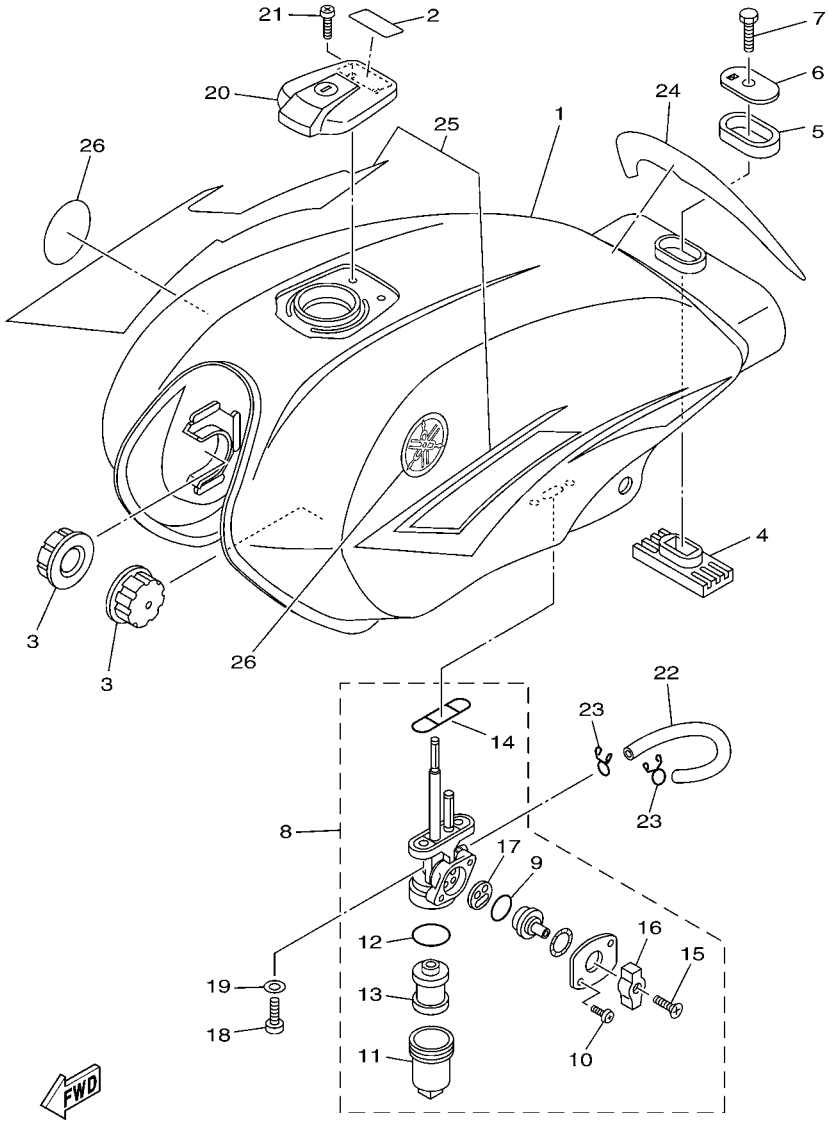

5C91261-E220

FIG. 22 FUEL TANK — DEPOSITO DE COMBUSTIBLE

REF. NO.	PART NO. CODIGO Nº	DESCRIPTION DESCRIPCION	5C91					REMARKS OBSERVACIONES
1	5C9–F4110–00	FUEL TANK COMP. DEPOSITO DE COMBUSTIBLE COMP.	1					
2	5C9–F415A–00	LABEL, CAUTION ETIQUETA DE PRECAUCION	1					
3	5C9–F4181–00	DAMPER, LOCATING 1 AMORTIGUADOR DE MONTAJE 1	2					
4	4LS–F4183–00	DAMPER, LOCATING 3 AMORTIGUADOR DE MONTAJE 3	1					
5	4UU–F4183–01	DAMPER, LOCATING 3 AMORTIGUADOR DE MONTAJE 3	1					
6	4UU–F4186–00	WASHER, SPECIAL ARANDELA ESPECIAL	1					
7	97007–08030	BOLT PERNO	1					
8	4LS–F4500–02	FUEL COCK ASSY 1 GRIFO DE COMBUSTIBLE 1	1					
9	4UU–F4534–00	.SEAL, COCK .SELLO DE GRIFO	1					
10	98507–03008	.SCREW, PAN HEAD .TORNILLO DE CABEZA PLANA	2					
11	4UU–F4521–00	.CUP, FILTER .COPA DE FILTRO	1					
12	4UU–F4565–00	.GASKET .EMPAQUE	1					
13	4UU–F4515–00	.NET, FILTER 2 .RED DE FILTRO 2	1					
14	4UU–F4512–00	.GASKET .EMPAQUE	1					
15	90149–04242	.SCREW .TORNILLO DE REGLAJE	1					
16	4UU–F4524–00	.LEVER, COCK .LLAVE DEL GRIFO	1					
17	4UU–F4523–00	.VALVE .VALVULA	1					
18	90157–06801	SCREW, PAN HEAD TORNILLO CABEZA CONICA PLANA	2					
19	90202–05193	WASHER, PLATE ARANDELA DE PLANA	2					
20	4UU–F4650–01	CAP ASSY TAPA COMPLETA	1					
21	98507–05010	SCREW, PAN HEAD TORNILLO DE CABEZA CON PLANA	2					
22	90445–10806	HOSE TUBO	1					
23	90467–09006	CLIP PRESILLA	2					
24	5TM–F4141–00	PROTECTOR, FUEL TANK PROTECTOR DEPOSITO COMBUST.	1					
25	5C9–F4240–00	GRAPHIC SET JUEGO DE CALCOMANIAS	1					UR FOR YB UR PARA YB
	5C9–F4240–10	GRAPHIC SET JUEGO DE CALCOMANIAS	1					UR FOR CNM UR PARA CNM
	5C9–F4240–20	GRAPHIC SET JUEGO DE CALCOMANIAS	1					UR FOR S3 UR PARA S3

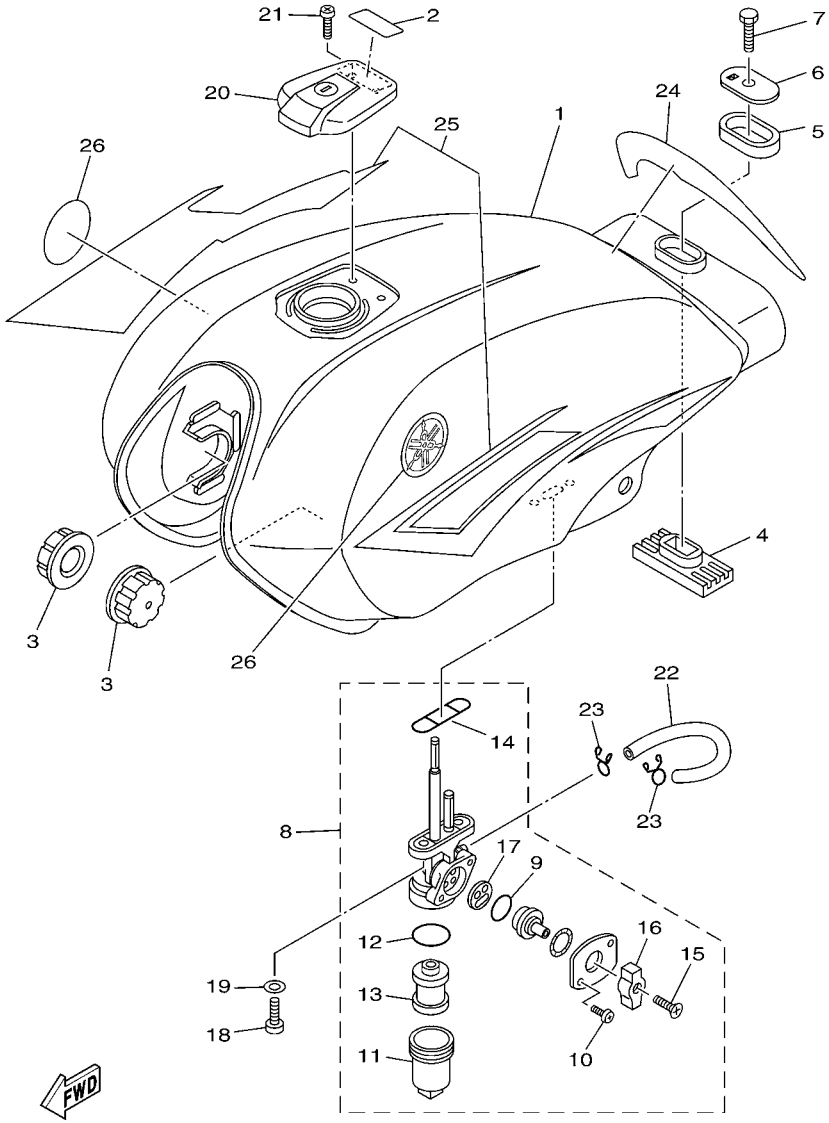

5C91261-E220

FIG. 22 FUEL TANK — DEPOSITO DE COMBUSTIBLE

REF. NO.	PART NO. CODIGO Nº	DESCRIPTION DESCRIPCION	5C91					REMARKS OBSERVACIONES
25	5C9–F4240–30	GRAPHIC SET JUEGO DE CALCOMANIAS	1					UR FOR DPBMC UR PARA DPBMC
26	5KA–F413B–00	EMBLEM EMBLEMA	2					

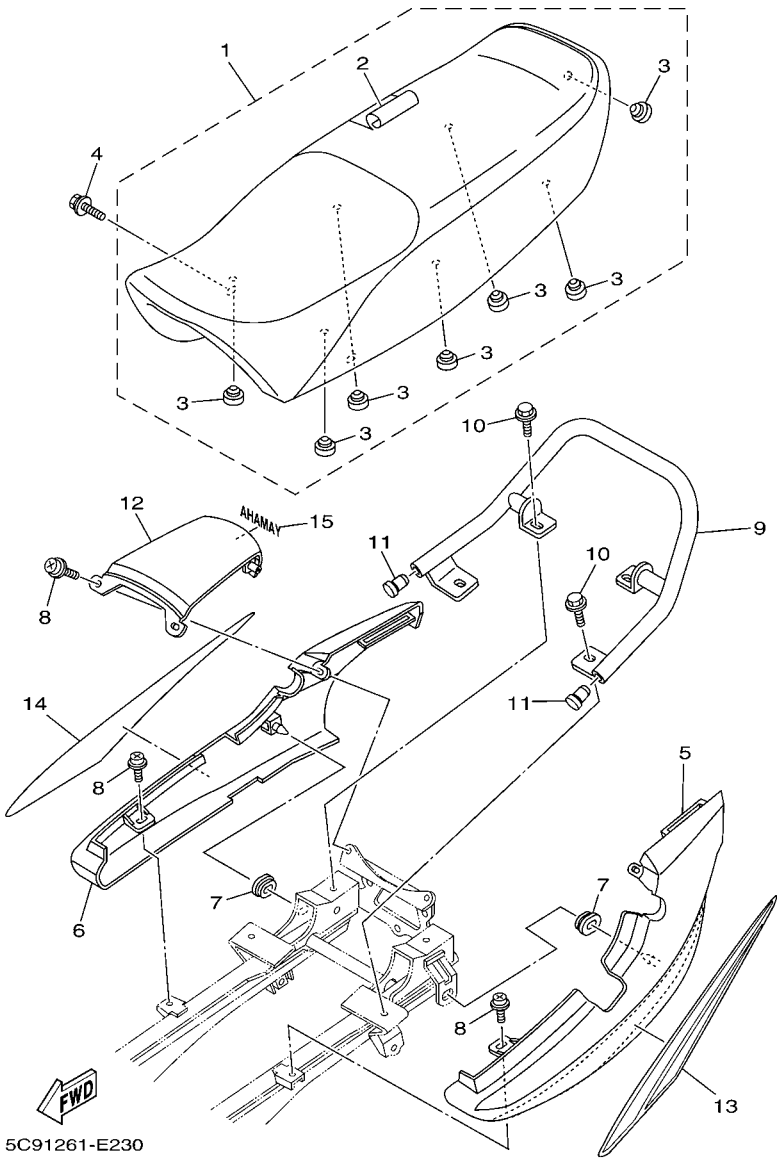

FIG. 23 SEAT — ASIENTO

REF. NO.	PART NO. CODIGO Nº	DESCRIPTION DESCRIPCION	5C91					REMARKS OBSERVACIONES
1	5C9–F4730–00	DOUBLE SEAT ASSY SILLIN DOBLE COMPLETO	1					
2	5C9–F4731–00	.COVER, SEAT .FUNDA DE SILLIN	1					
3	5C9–F4741–00	.PAD, SEAT .COJIN DE ASIENTO	7					
4	90119–06108	BOLT, WITH WASHER TORNILLO CON ARANDELA	2					
5	5C9–F471K–00	COVER, TAIL 1 CUBIERTA, DE COLA 1	1					
6	5C9–F472K–00	COVER, TAIL 2 CUBIERTA, DE COLA 2	1					
7	90480–01870	GROMMET TAPON	2					
8	90159–05065	SCREW, WITH WASHER TORNILLO CON VALONA	4					
9	5C9–F4773–00	HANDLE, SEAT MANIJA DE ASIENTO	1					
10	90105–08809	BOLT, FLANGE TORNILLO	4					
11	90338–16803	PLUG TAPON	2					
12	5C9–F4756–00–33	COVER, TAIL CUBIERTA DE COLA	1					UR YB UR YB
	5C9–F4756–00–H6	COVER, TAIL CUBIERTA DE COLA	1					UR CNM UR CNM
	5C9–F4756–00–P0	COVER, TAIL CUBIERTA DE COLA	1					UR S3 UR S3
	5C9–F4756–00–P1	COVER, TAIL CUBIERTA DE COLA	1					UR DPBMC UR DPBMC
13	5C9–F477M–00	GRAPHIC SET, TAIL COVER GRAFICO, CUBIERTA TRASERA	1					UR FOR YB UR PARA YB
	5C9–F477M–10	GRAPHIC SET, TAIL COVER GRAFICO, CUBIERTA TRASERA	1					UR FOR CNM UR PARA CNM
	5C9–F477M–20	GRAPHIC SET, TAIL COVER GRAFICO, CUBIERTA TRASERA	1					UR FOR S3 UR PARA S3
	5C9–F477M–30	GRAPHIC SET, TAIL COVER GRAFICO, CUBIERTA TRASERA	1					UR FOR DPBMC UR PARA DPBMC
14	5C9–F477N–00	GRAPHIC SET, TAIL COVER 2 GRAFICO, CUBIERTA TRASERA 2	1					UR FOR YB UR PARA YB
	5C9–F477N–10	GRAPHIC SET, TAIL COVER 2 GRAFICO, CUBIERTA TRASERA 2	1					UR FOR CNM UR PARA CNM
	5C9–F477N–20	GRAPHIC SET, TAIL COVER 2 GRAFICO, CUBIERTA TRASERA 2	1					UR FOR S3 UR PARA S3
	5C9–F477N–30	GRAPHIC SET, TAIL COVER 2 GRAFICO, CUBIERTA TRASERA 2	1					UR FOR DPBMC UR PARA DPBMC
15	99241–00080	EMBLEM, YAMAHA EMBLEMA, YAMAHA	1					UR FOR YB UR PARA YB
	99244–00080	EMBLEM, YAMAHA EMBLEMA, YAMAHA	1					UR FOR CNM UR PARA CNM
	99246–00080	EMBLEM, YAMAHA EMBLEMA, YAMAHA	1					UR FOR S3,DPBMC UR PARA S3,DPBMC

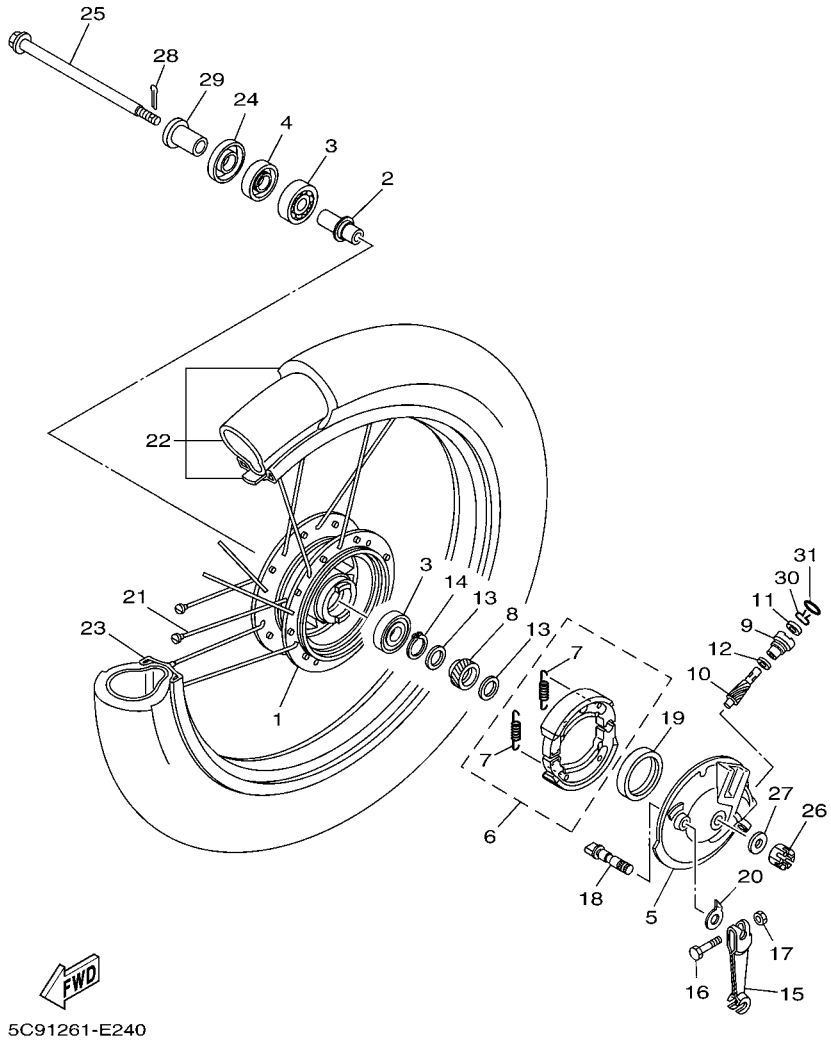

FIG. 24 FRONT WHEEL RUEDA DELANTERA

REF. NO.	PART NO. CODIGO Nº	DESCRIPTION DESCRIPCION	5C91					REMARKS OBSERVACIONES
1	5TR–F5111–00	HUB, FRONT MASA DELANTERA	1					
2	36L–F5116–00	FLANGE, SPACER 2 BRIDA DE ESPACIADOR 2	1					
3	93306–301Y3	BEARING COJINETE	2					
4	93102–18802	OIL SEAL SELLO ACEITE	1					
5	36L–F5121–10	PLATE, BRAKE SHOE PLACA DE ZAPATA DE FRENO	1					
6	36L–WF536–00	BRAKE SHOE SET JUEGO DE ZAPATA DE FRENO	1					
7	90506–14801	.SPRING, TENSION .RESORTE DE TENSION	2					
8	36L–F5135–11	GEAR, DRIVE ENGRANAJE DE TRACCION	1					
9	36L–F5136–00	BUSH BUJE	1					
10	36L–F5138–11	GEAR, METER ENGRANAJE DE MEDIDOR	1					
11	93104–07804	OIL SEAL SELLO ACEITE	1					
12	90201–07076	WASHER, PLATE ARANDELA PLANA	1					
13	90201–20269	WASHER, PLATE ARANDELA PLANA	2					
14	93410–20808	CIRCLIP SEGURO	1					
15	36L–F5155–00	LEVER, CAMSHAFT 1 PALANCA DE ARBOL DE LEVAS	1					
16	90101–06814	BOLT TORNILLO	1					
17	9530N–06600	NUT TUERCA	1					
18	36L–F5351–00	CAMSHAFT ARBOL DE LEVAS	1					
19	93105–47801	OIL SEAL SELLO ACEITE	1					
20	36L–F513A–00	PLATE, INDICATOR PLACA DE INDICADOR	1					
21	5US–F5104–00	SPOKE SET JUEGO DE RAYOS	1					
22	5C9–F5108–00	FRONT TIRE SET NEUMATICO	1					
23	5US–F5144–00	RIM (1.60-18) ARO (1.60-18)	1					UR UR
	5US–F5144–V0	RIM (1.60-18) ARO (1.60-18)	1					UR UR
24	36L–F5118–00	COVER, HUB DUST CUBIERTA DE MASA PARA POLVO	1					
25	36L–F5181–00	AXLE, WHEEL EJE DE LA RUEDA	1					
26	90171–10803	NUT, CASTLE TUERCA ENTALLADA	1					

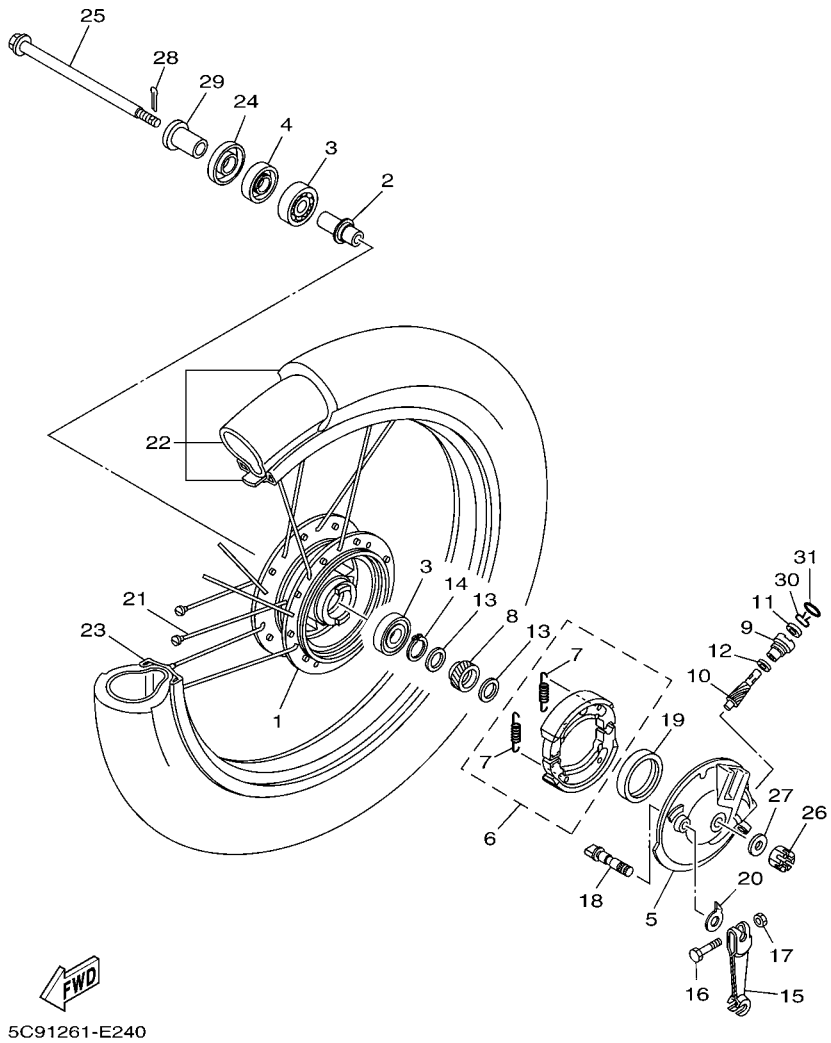

FIG. 24 FRONT WHEEL RUEDA DELANTERA

REF. NO.	PART NO. CODIGO Nº	DESCRIPTION DESCRIPCION	5C91					REMARKS OBSERVACIONES
27	9290N–10200	WASHER ARANDELA	1					
28	91401–20020	PIN, COTTER PASADOR DE CHAVETA	1					
29	90387–121L9	COLLAR ESPACIADOR	1					
30	36L–F5137–00	RING, STOP ANILLO DE TOPE	1					
31	93210–14806	O-RING ANILLO O	1					

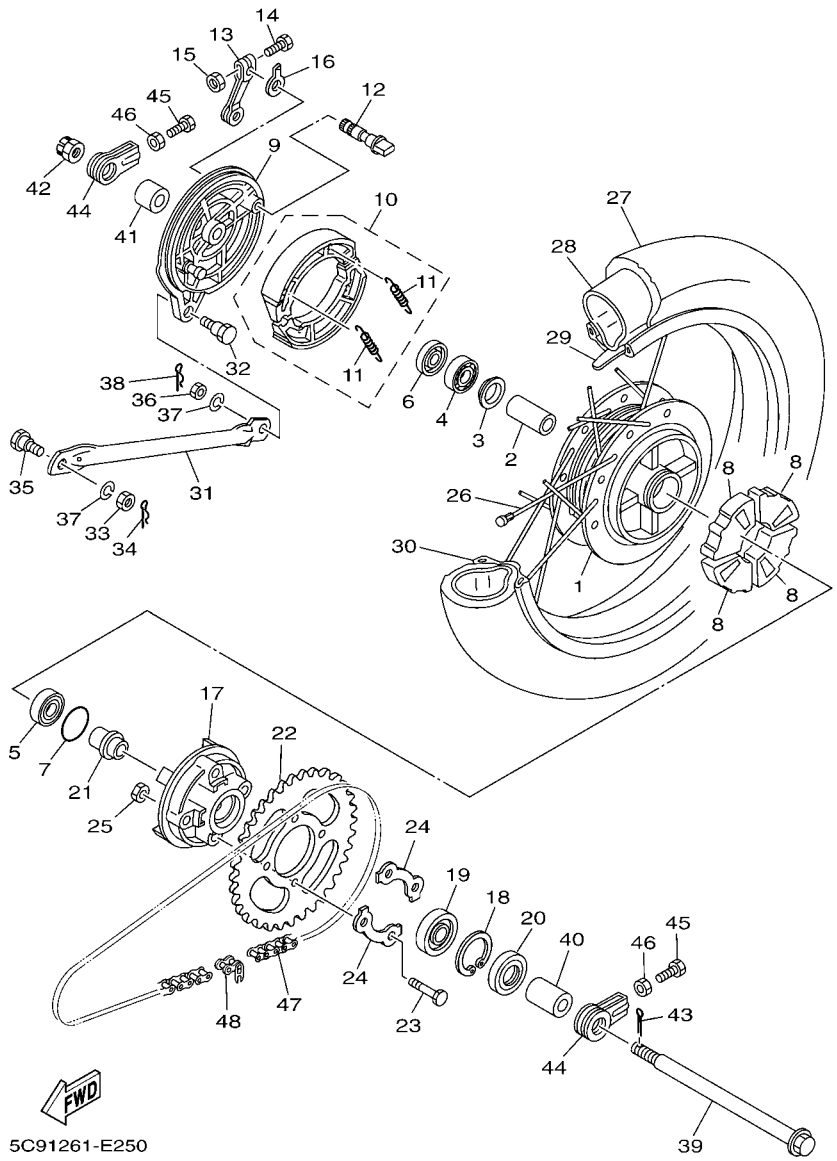

FIG. 25 REAR WHEEL — RUEDA TRASERA

REF. NO.	PART NO. CODIGO Nº	DESCRIPTION DESCRIPCION	5C91					REMARKS OBSERVACIONES
1	5TR–F5311–00	HUB, REAR MASA TRASERA	1					
2	90560–15136	SPACER SEPARADOR	1					
3	36L–F5315–00	FLANGE, SPACER SEPARADOR	1					
4	93306–202Y0	BEARING COJINETE	1					
5	93306–202Y1	BEARING COJINETE	1					
6	93104–22805	OIL SEAL SELLO ACEITE	1					
7	93210–42807	O-RING ANILLO O	1					
8	5C9–F5364–00	DAMPER AMORTIGUADOR	4					
9	36L–F5321–11	PLATE, BRAKE SHOE PLACA DE ZAPATA DE FRENO	1					
10	36L–WF536–00	BRAKE SHOE SET JUEGO DE ZAPATA DE FRENO	2					
11	90506–14801	.SPRING, TENSION .RESORTE DE TENSION	2					
12	36L–F5351–00	CAMSHAFT ARBOL DE LEVAS	1					
13	4LS–F5355–00	LEVER, CAMSHAFT PALANCA DE ARBOL DE LEVAS	1					
14	90101–06278	BOLT TORNILLO	1					
15	9530N–06600	NUT TUERCA	1					
16	36L–F533A–00	PLATE, INDICATOR PLACA INDICADOR	1					
17	36L–F5366–10	CLUTCH, HUB EMBRAGUE DE MASA	1					
18	93420–42801	CIRCLIP SEGURO	1					
19	93306–004Y0	BEARING COJINETE	1					
20	93106–26801	OIL SEAL SELLO ACEITE	1					
21	5C9–F5387–00	AXLE, SPROCKET EJE DE CORONA	1					
22	5C9–F5444–00	SPROCKET, DRIVEN (44T) CORONA (44T)	1					
23	90109–08864	BOLT PERNO	4					
24	4JF–F5412–00	WASHER ARANDELA	2					
25	90179–08816	NUT TUERCA	4					
26	5US–F5104–00	SPOKE SET JUEGO DE RAYOS	1					
27	94127–18826	TIRE (2.75-18 4PR) NEUMATICO (2.75-18 4PR)	1					DUNLOP DUNLOP

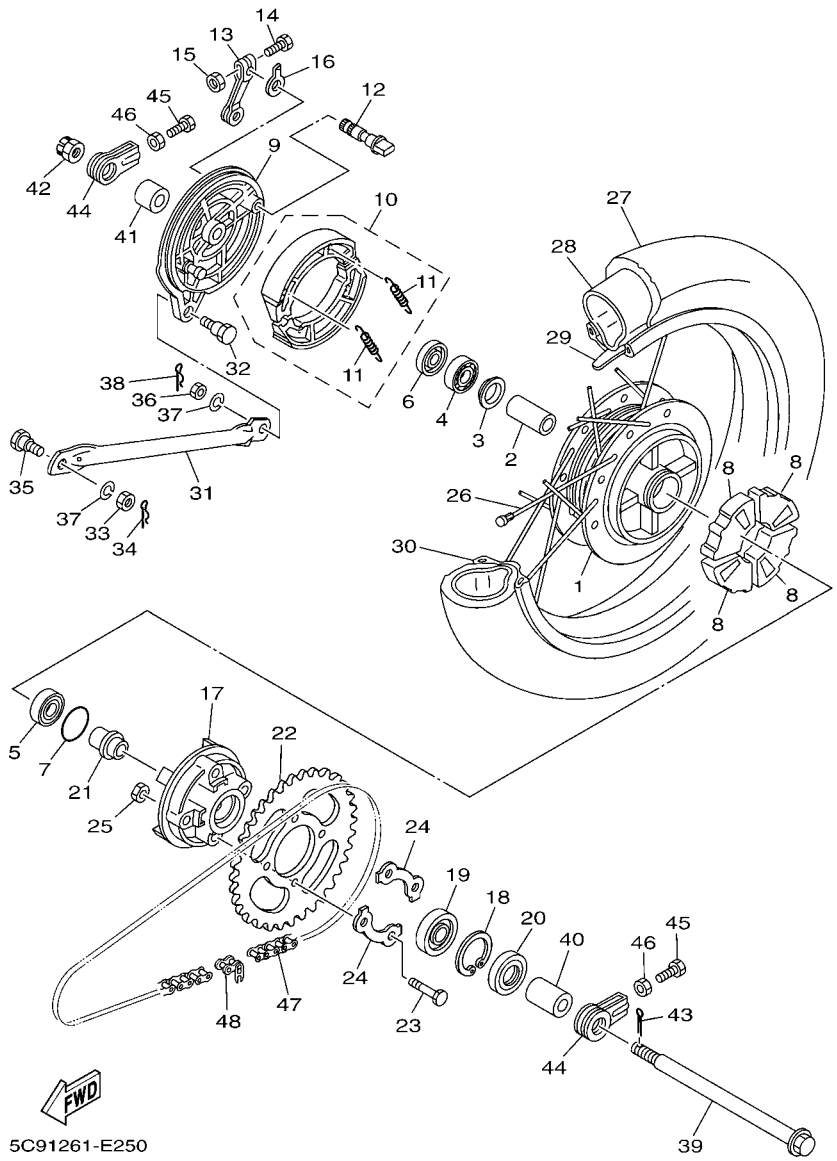

FIG. 25 REAR WHEEL RUEDA TRASERA

REF. NO.	PART NO. CODIGO Nº	DESCRIPTION DESCRIPCION	5C91					REMARKS OBSERVACIONES
28	94227–18824	TUBE (2.75-18) TUBO (2.75-18)	1					
29	94325–18822	BAND, RIM (2.50-18) BANDA DE ARO (2.50-18)	1					
30	5US–F5144–00	RIM (1.60-18) ARO (1.60-18)	1					UR UR
	5US–F5144–V0	RIM (1.60-18) ARO (1.60-18)	1					UR UR
31	5VA–F5371–00	BAR, TENSION BARRA TENSORA	1					
32	90109–08063	BOLT PERNO	1					
33	9530N–08600	NUT TUERCA	1					
34	90468–12007	CLIP PRESILLA	1					
35	90109–08368	BOLT PERNO	1					
36	9530N–08700	NUT TUERCA	1					
37	9290N–08100	WASHER, SPRING ARANDELA	2					
38	90468–12007	CLIP PRESILLA	1					
39	5KA–F5381–00	AXLE, WHEEL EJE DE RUEDA	1					
40	5C9–F5376–00	COLLAR, WHEEL COLLAR DE RUEDA	1					
41	5C9–F5377–00	COLLAR, WHEEL COLLAR DE RUEDA	1					
42	90171–14800	NUT, CASTLE TUERCA ENTALLADA	1					
43	91401–30030	PIN, COTTER PASADOR DE CHAVETA	1					
44	5C9–F5388–00	PULLER, CHAIN 1 TIRADOR DE CADENA 1	2					
45	90153–08011	SCREW, HEXAGON TORNILLO HEXAGONAL	2					
46	95307–08700	NUT TUERCA	2					
47	94568–81111	CHAIN CADENA	1					UR UR
	94568–86111	CHAIN (R428-111L) CADENA (R428-111L)	1					UR UR
48	94668–81001	JOINT, CHAIN CONECTOR DE CADENA	1					UR UR
	94668–86001	JOINT, CHAIN (R428) CONECTOR DE CADENA (R428)	1					UR UR

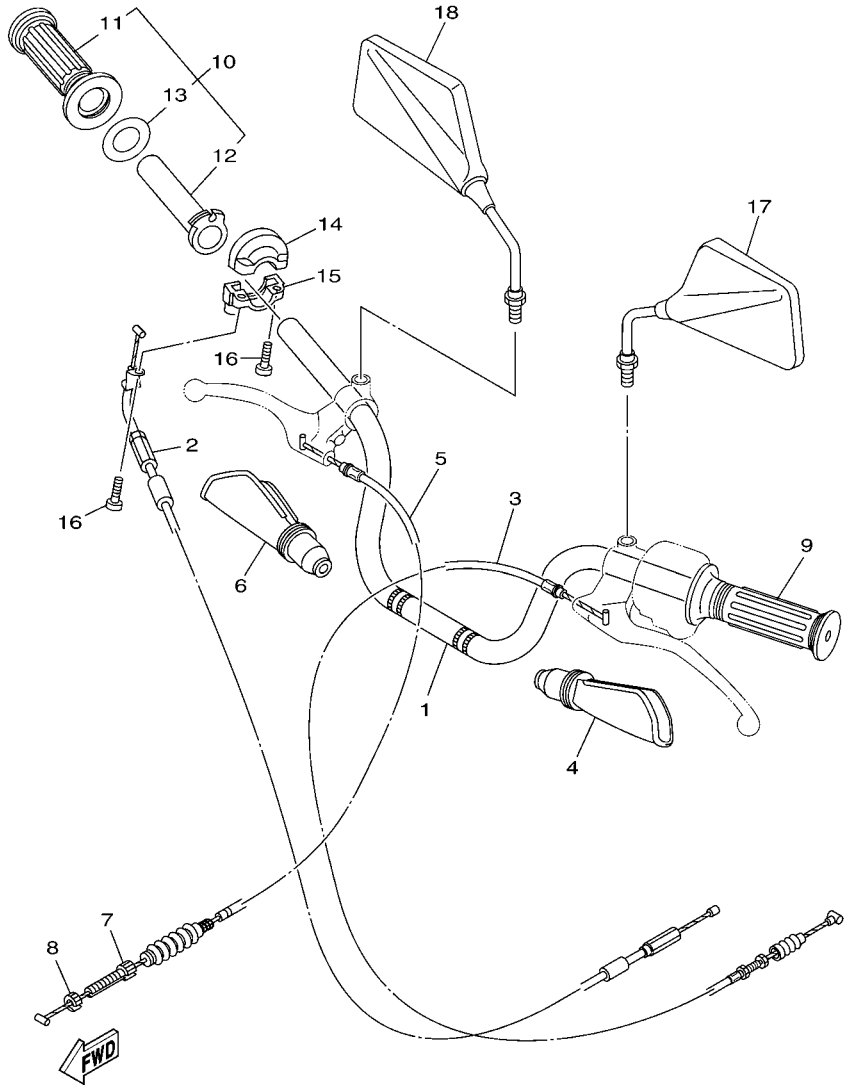

FIG. 26 STEERING HANDLE & CABLE MANILLAR & CABLE

REF. NO.	PART NO. CODIGO Nº	DESCRIPTION DESCRIPCION	5C91					REMARKS OBSERVACIONES
1	5C9–F6111–00	HANDLEBAR MANUBRIO	1					
2	5KA–F6311–10	CABLE, THROTTLE 1 CABLE DE ACELERADOR 1	1					
3	5KA–F6335–10	CABLE, CLUTCH CABLE DE EMBRAGUE	1					
4	5TS–F6372–00	COVER, HANDLE LEVER 1 CUBIERTA DE PALANCA DE MANUB 1	1					
5	5KA–F6341–21	CABLE, BRAKE CABLE DE FRENO	1					
6	5TS–F6372–00	COVER, HANDLE LEVER 1 CUBIERTA DE PALANCA DE MANUB 1	1					
7	90123–06010	BOLT PERNO	1					
8	90179–06143	NUT TUERCA	1					
9	5VA–F6241–00	GRIP EMPUNADURA	1					
10	5C9–F6240–00	GRIP ASSY EMPUNADURA COMPLETA	1					
11	5VA–F6242–00	.GRIP (RIGHT) .EMPUNADURA (MD)	1					
12	5C9–F6243–00	.TUBE, THROTTLE GUIDE .TUBO DE GUIA DE OBTURADOR	1					
13	36L–F6249–00	.RING, LEAF .ANILLO DE FLEJE	1					
14	36L–F6281–10	CAP, GRIP UPPER TAPA DE EMPUNADURA SUPERIOR	1					
15	5KA–F6282–10	CAP, GRIP LOWER TAPA DE EMPUNADURA INFERIOR	1					
16	90157–05116	SCREW, PAN HEAD TORNILLO CABEZA CONICA PLANA	2					
17	4JF–F6280–00	REAR VIEW MIRROR ASSY (LEFT) ESPEJO COMPLETO (IZQUIERDO)	1					
18	4JF–F6290–00	REAR VIEW MIRROR ASSY (RIGHT) ESPEJO COMPLETO (DERECHO)	1					

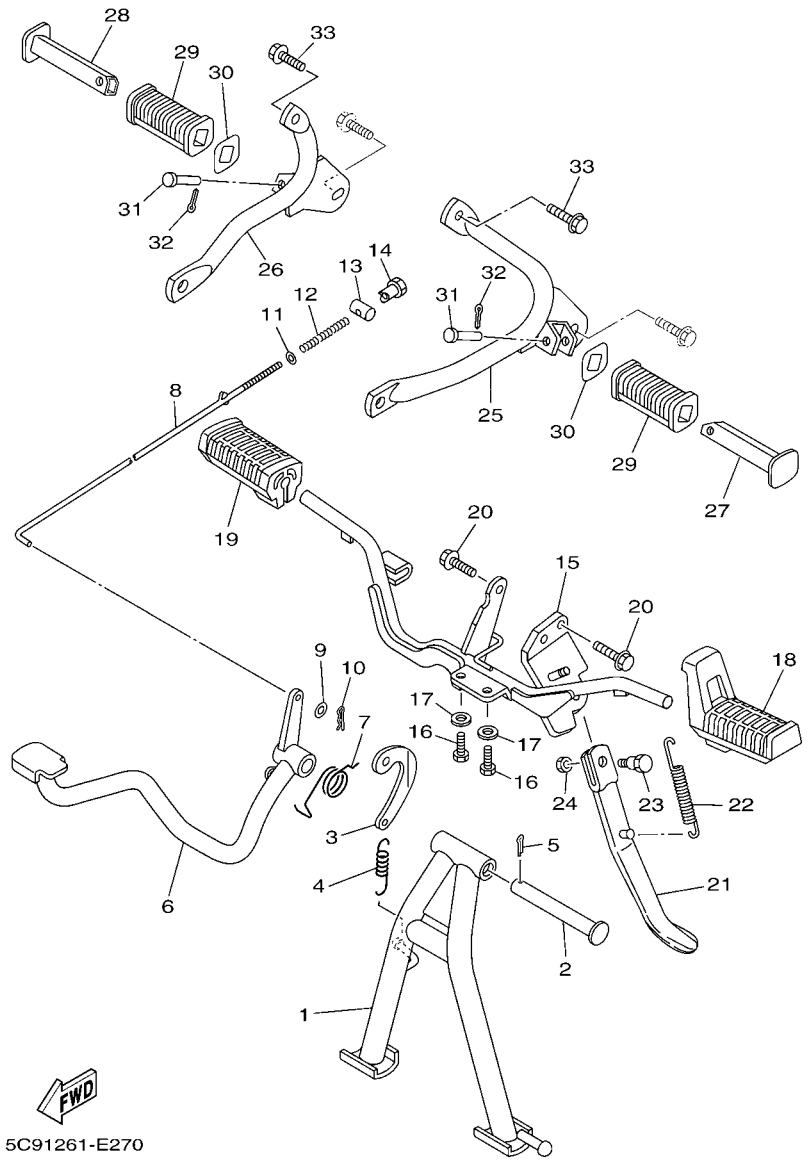

FIG. 27 STAND & FOOTREST — SOPORTE & APOYAPIE

REF. NO.	PART NO. CODIGO Nº	DESCRIPTION DESCRIPCION	5C91					REMARKS OBSERVACIONES
1	5C9–F7111–00	STAND, MAIN PUNTAL PRINCIPAL	1					
2	5C9–F7112–00	SHAFT, MAIN STAND EJE DE PUNTAL PRINCIPAL	1					
3	5C9–F7115–00	LINK, MAIN STAND CONEXION DE PUNTAL PRINCIPAL	1					
4	90506–29054	SPRING, TENSION RESORTE DE TENSION	1					
5	90252–55800	PIN, COTTER PASADOR DE CHAVETA	1					
6	5C9–F7211–00	PEDAL, BRAKE PEDAL DE FRENO	1					
7	90508–32056	SPRING, TORSION RESORTE DE TORSION	1					
8	5VA–F7231–00	ROD, BRAKE VARILLA DE FRENO	1					
9	9290N–06600	WASHER ARANDELA	1					
10	90468–12007	CLIP PRESILLA	1					
11	9290N–06600	WASHER ARANDELA	1					
12	90501–10245	SPRING, COMPRESSION RESORTE DE COMPRESION	1					
13	90249–12008	PIN PASADOR	1					
14	90179–06806	NUT TUERCA	1					
15	5C9–F7411–00	FOOTREST 1 APOYAPIE 1	1					
16	97027–08020	BOLT PERNO	2					
17	92907–08200	WASHER ARANDELA	2					
18	5C9–F7413–00	COVER, FOOTREST CUBIERTA DE APOYAPIE	1					
19	5C9–F7413–10	COVER, FOOTREST CUBIERTA DE APOYAPIE	1					
20	95817–08020	BOLT, FLANGE TORNILLO	2					
21	5VA–F7311–00	STAND, SIDE PUNTAL LATERAL	1					
22	90506–25047	SPRING, TENSION RESORTE DE TENSION	1					
23	90109–08032	BOLT PERNO	1					
24	95307–08700	NUT TUERCA	1					
25	5C9–F7432–00	BRACKET 1 SOPORTE 1	1					
26	5C9–F7442–00	BRACKET 2 SOPORTE 2	1					
27	5GE–F7431–00	FOOTREST, REAR 1 APOYAPIE POSTERIOR 1	1					

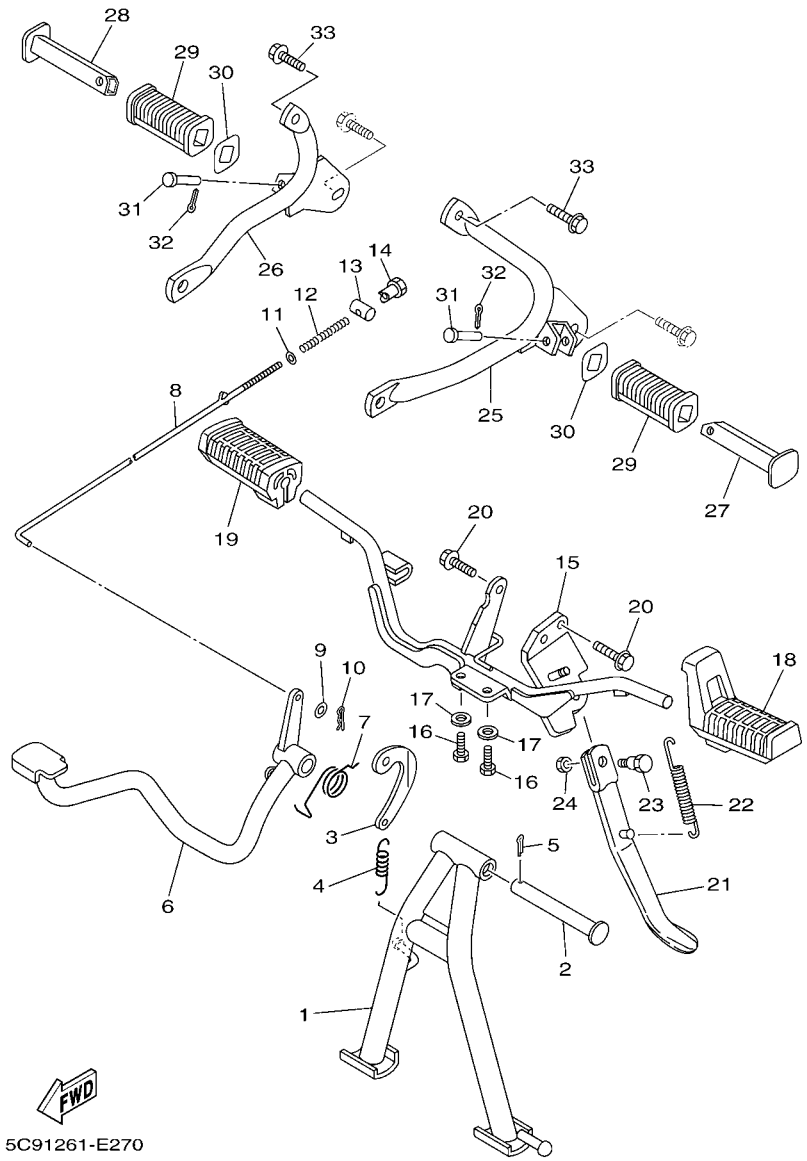

FIG. 27 STAND & FOOTREST SOPORTE & APOYAPIE

REF. NO.	PART NO. CODIGO Nº	DESCRIPTION DESCRIPCION	5C91					REMARKS OBSERVACIONES
28	5GE–F7441–00	FOOTREST, REAR 2 APOYAPIE POSTERIOR 2	1					
29	5GE–F7433–00	COVER, REAR FOOTREST CUBIERTA APOYAPIE TRASERO	2					
30	90209–18070	WASHER ARANDELA DE SEPARACION	2					
31	90240–08800	PIN, CLEVIS PASADOR CON HOYO	2					
32	90252–27800	PIN, COTTER PASADOR DE CHAVETA	2					
33	9580N–08020	BOLT, FLANGE TORNILLO	2					

FIG. 28 GENERATOR GENERADOR

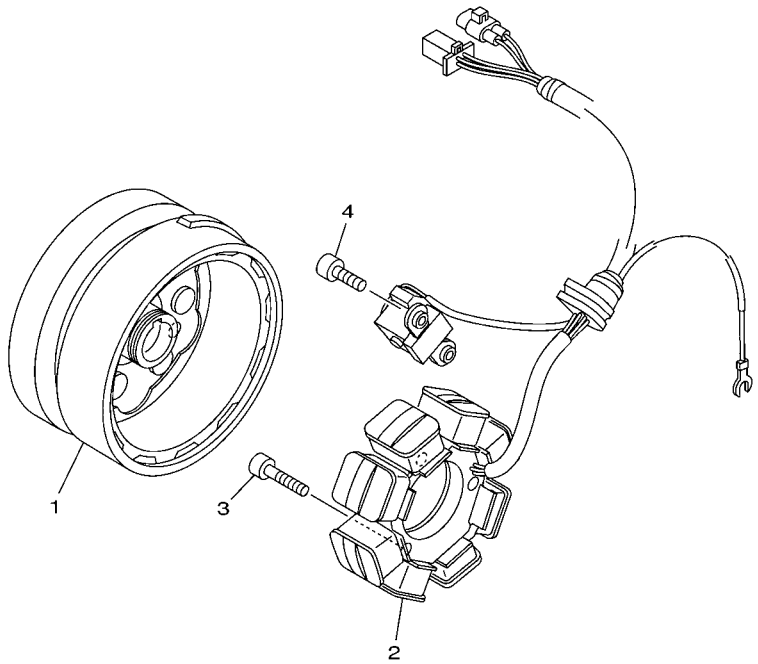

5UJ5200-C280

REF. NO.	PART NO. CODIGO Nº	DESCRIPTION DESCRIPCION	5C91					REMARKS OBSERVACIONES
1	5KA–H1450–30	ROTOR ASSY ROTOR COMPLETO	1					
2	5KA–H1410–30	STATOR ASSY ESTATOR COMPLETO	1					
3	90157–06805	SCREW, PAN HEAD TORNILLO CABEZA CONICA PLANA	3					
4	90157–06802	SCREW, PAN HEAD TORNILLO CABEZA CONICA PLANA	2					

FIG. 29 FLASHER LIGHT LUZ DE DESTELLADOR

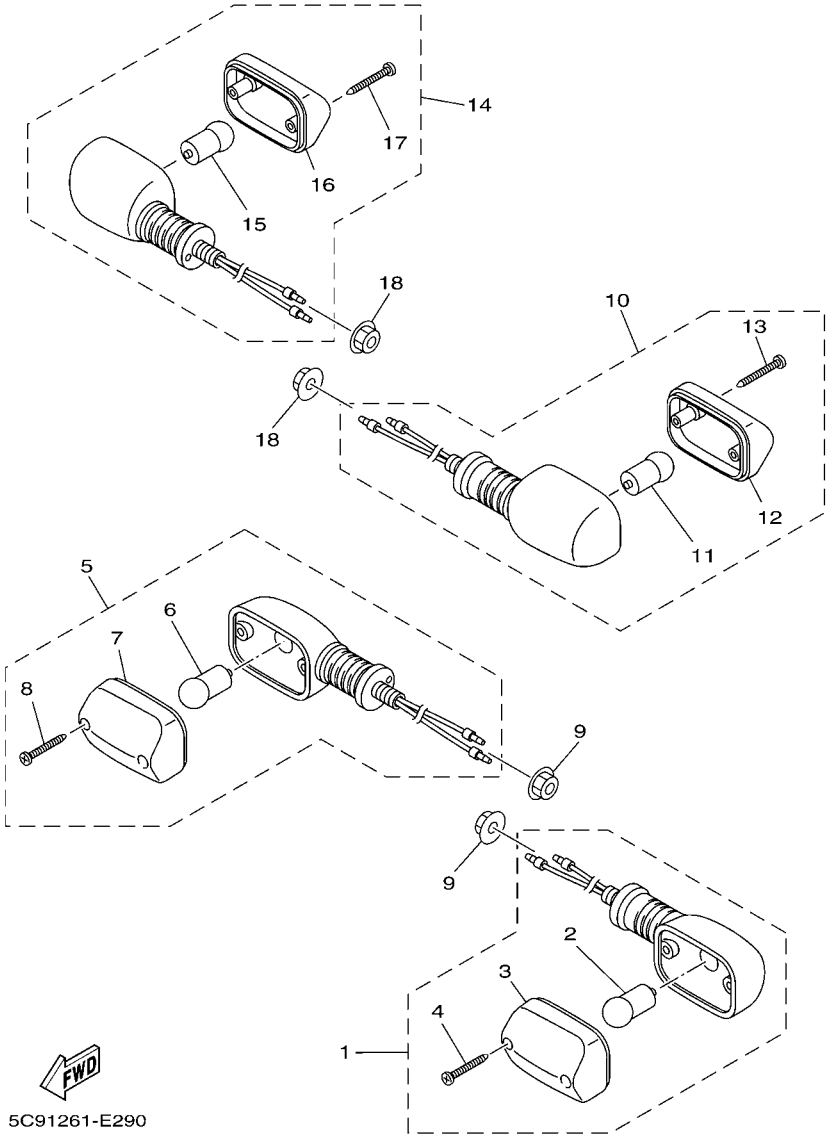

REF. NO.	PART NO. CODIGO Nº	DESCRIPTION DESCRIPCION	5C91					REMARKS OBSERVACIONES
1	5KA–H3310–10	FRONT FLASHER LIGHT ASSY 1 DESTELLADOR DE LUZ DELANT.	1					
2	36L–H3311–00	.BULB, FLASHER (12V-10W) .BOMBILLA (12V-10W)	1					
3	5KA–H252K–00	.LENS .LENTE	1					
4	97707–06112	.SCREW, TAPPING .TORNILLO ROSCA HEMBRA	2					
5	5KA–H3320–10	FRONT FLASHER LIGHT ASSY 2 DESTELLADOR DE LUZ DELANT.	1					
6	36L–H3311–00	.BULB, FLASHER (12V-10W) .BOMBILLA (12V-10W)	1					
7	5KA–H252K–00	.LENS .LENTE	1					
8	97707–06112	.SCREW, TAPPING .TORNILLO ROSCA HEMBRA	2					
9	9570N–12500	NUT, FLANGE TUERCA DE BRIDA	2					
10	5KA–H3330–40	REAR FLASHER LIGHT ASSY 1 DESTELLADOR DE LUZ TRAS.COMPL.	1					
11	36L–H3311–00	.BULB, FLASHER (12V-10W) .BOMBILLA (12V-10W)	1					
12	5KA–H252K–00	.LENS .LENTE	1					
13	97707–06112	.SCREW, TAPPING .TORNILLO ROSCA HEMBRA	2					
14	5KA–H3340–40	REAR FLASHER LIGHT ASSY 2 DESTELLADOR DE LUZ TRAS.COMPL.	1					
15	36L–H3311–00	.BULB, FLASHER (12V-10W) .BOMBILLA (12V-10W)	1					
16	5KA–H252K–00	.LENS .LENTE	1					
17	97707–06112	.SCREW, TAPPING .TORNILLO ROSCA HEMBRA	2					
18	9570N–12500	NUT, FLANGE TUERCA DE BRIDA	2					

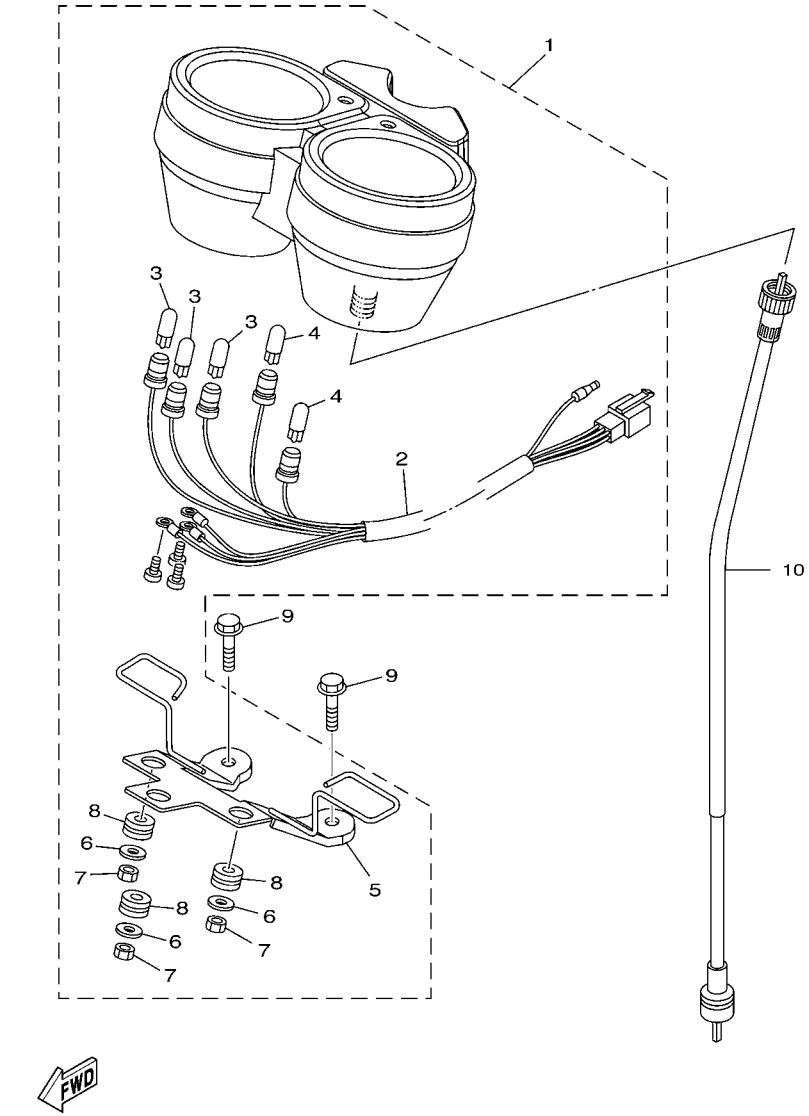

FIG. 30 METER MEDIDOR

REF. NO.	PART NO. CODIGO Nº	DESCRIPTION DESCRIPCION	5C91					REMARKS OBSERVACIONES
1	5KA–H3500–20	SPEEDOMETER COMPLETE VELOCIMETRO COMPLETO	1					
2	5KA–H3509–00	.SOCKET CORD ASSY .ENCASTRE DE CABLE COMPLETO	1					
3	4LS–H3517–00	.BULB (12V-3.4W) .AMPOLLETA (12V-3.4W)	3					
4	4LS–H3517–10	.BULB (12V-2.0W) .AMPOLLETA (12V-2.0W)	2					
5	5KA–H3519–00	.BRACKET, METER .SOPORTE DE MEDIDOR	1					
6	4LS–H3524–00	.WASHER, SPECIAL .ARANDELA ESPECIAL	3					
7	95301–05600	.NUT .TUERCA HEXAGONAL	3					
8	5KA–H3513–00	.DAMPER .AMORTIGUADOR	3					
9	9580N–06012	BOLT, FLANGE TORNILLO	2					
10	5KA–H3550–10	SPEEDOMETER CABLE ASSY CABLE DE VELOCIMETRO COMPLETO	1					

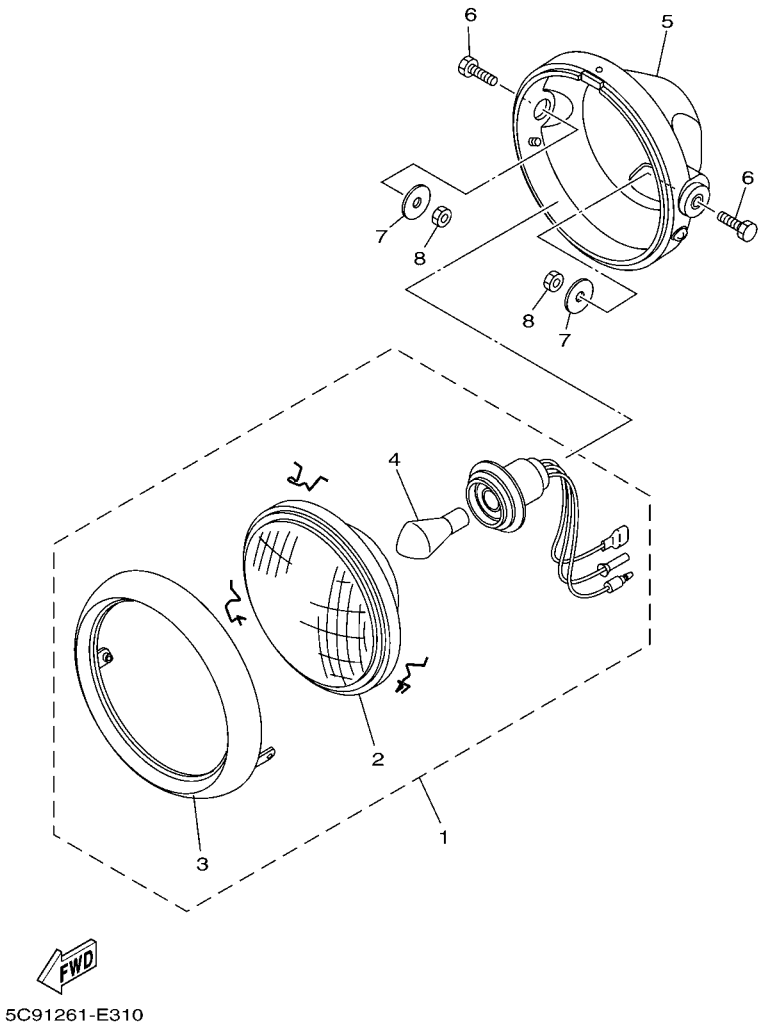

FIG. 31 HEADLIGHT FARO DELANTERO

REF. NO.	PART NO. CODIGO Nº	DESCRIPTION DESCRIPCION	5C91					REMARKS OBSERVACIONES
1	5KA–H4310–10	HEADLIGHT UNIT ASSY UNIDAD DE FARO DELANTERO COMPL	1					
2	5KA–H4320–10	.LENS ASSY .LENTE COMPLETO	1					
3	5KA–H4315–10	.RIM, HEADLIGHT .ARO DE FARO DELANTERO	1					
4	4LS–H4314–00	.BULB, HEADLIGHT (12V-35/35W) .BOMBILLA (12V-35/35W)	1					
5	5KA–H4130–10	BODY ASSY, HEADLIGHT CUERPO COMPL FARO DELANTERO	1					
6	97007–08025	BOLT PERNO	2					
7	90201–08612	WASHER, PLATE ARANDELA PLANA	2					
8	9530N–08600	NUT TUERCA	2					

FIG. 32 TAILLIGHT LUZ DE COLA

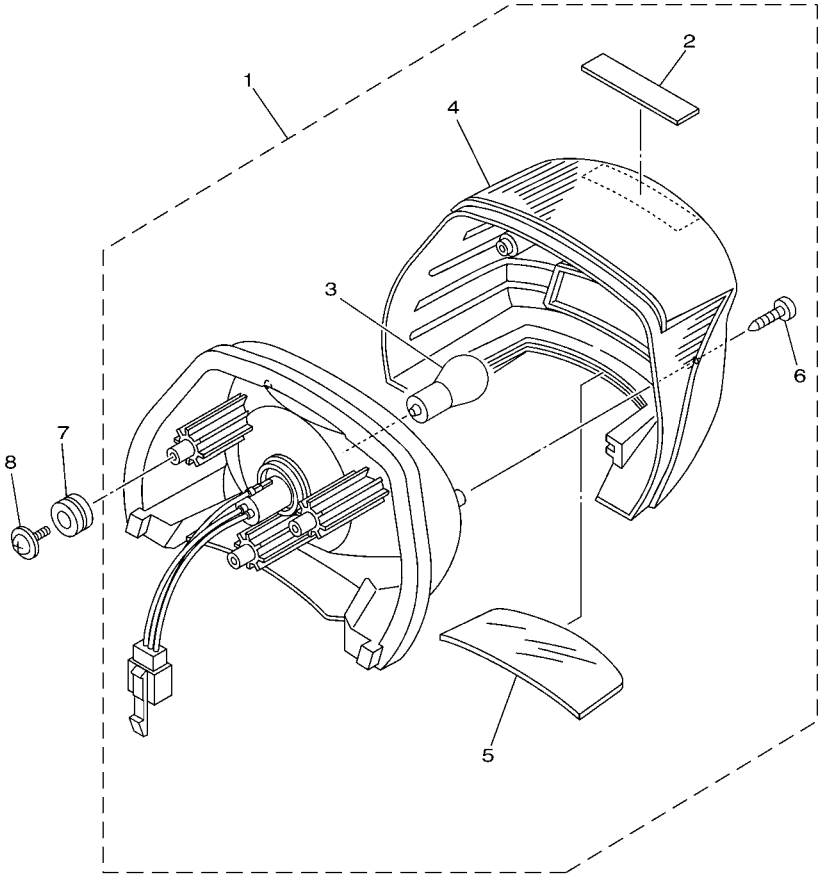

5C91261-E320

REF. NO.	PART NO. CODIGO Nº	DESCRIPTION DESCRIPCION	5C91					REMARKS OBSERVACIONES
1	5DG–H4710–10	TAILLIGHT UNIT ASSY UNIDAD FARO TRASERO COMPL.	1					
2	5KA–H4736–00	.DAMPER, TAIL 1 .AMORTIGUADOR DE COLA	1					
3	36L–H4714–00	.BULB (12V-21/5W) .BOMBILLA (12V-21/5W)	1					
4	5DG–H4721–00	.LENS, TAILLIGHT .LENTE DE FARO TRASERO	1					
5	5DG–H4743–00	.LENS, LICENCE LIGHT .LENTE DE LUZ DE LICENCIA	1					
6	9770N–40520	.SCREW, TAPPING .TORNILLO ROSCA HEMBRA	2					
7	90480–14800	GROMMET TAPON	3					
8	90164–05014	SCREW, TAPPING TORNILLO ROSCA HEMBRA	3					

FIG. 33 HANDLE SWITCH & LEVER INTERRUPTOR DE MANILLAR&PALANC

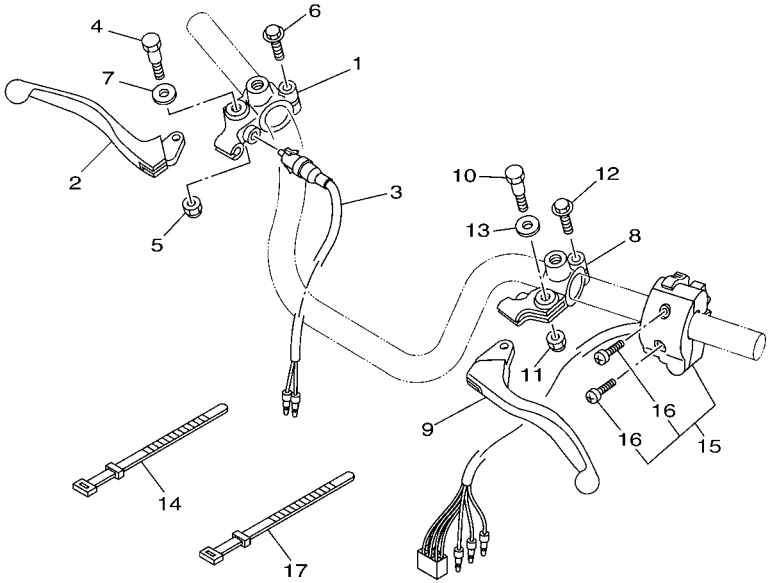

5C91261-E330

REF. NO.	PART NO. CODIGO Nº	DESCRIPTION DESCRIPCION	5C91					REMARKS OBSERVACIONES
1	5TS–H2921–00	HOLDER, LEVER 2 SOPORTE DE LEVA 2	1					
2	4LS–H3922–00	LEVER 2 PALANCA 2	1					
3	36L–H3980–V0	FRONT STOP SWITCH ASSY INTERRUP. DE PARADA DELANTERO	1					
4	36L–H3945–V0	BOLT, LEVER PERNO DE PALANCA	1					
5	95707–06300	NUT, NYLON TUERCA DE BRIDA	1					
6	97507–06425	BOLT, WITH WASHER PERNO CON ARANDELA	1					
7	90201–08085	WASHER, PLATE ARANDELA PLANA	1					
8	5TS–H2911–00	HOLDER, LEVER 1 SOPORTE DE LEVA 1	1					
9	4LS–H3912–00	LEVER 1 PALANCA 1	1					
10	36L–H3945–V0	BOLT, LEVER PERNO DE PALANCA	1					
11	95707–06300	NUT, NYLON TUERCA DE BRIDA	1					
12	9750M–06425	BOLT, WITH WASHER PERNO CON ARANDELA	1					
13	90201–08085	WASHER, PLATE ARANDELA PLANA	1					
14	36L–H3936–00	BAND, SWITCH CORD BANDA DE CABLE DE INTERRUPTOR	2					
15	5KA–H3972–20	SWITCH, HANDLE 4 INTERRUPTOR DE MANIJA 4	1					
16	9850M–05012	.SCREW, PAN HEAD .TORNILLO DE CABEZA CON PLANA	2					
17	36L–H3936–00	BAND, SWITCH CORD BANDA DE CABLE DE INTERRUPTOR	2					

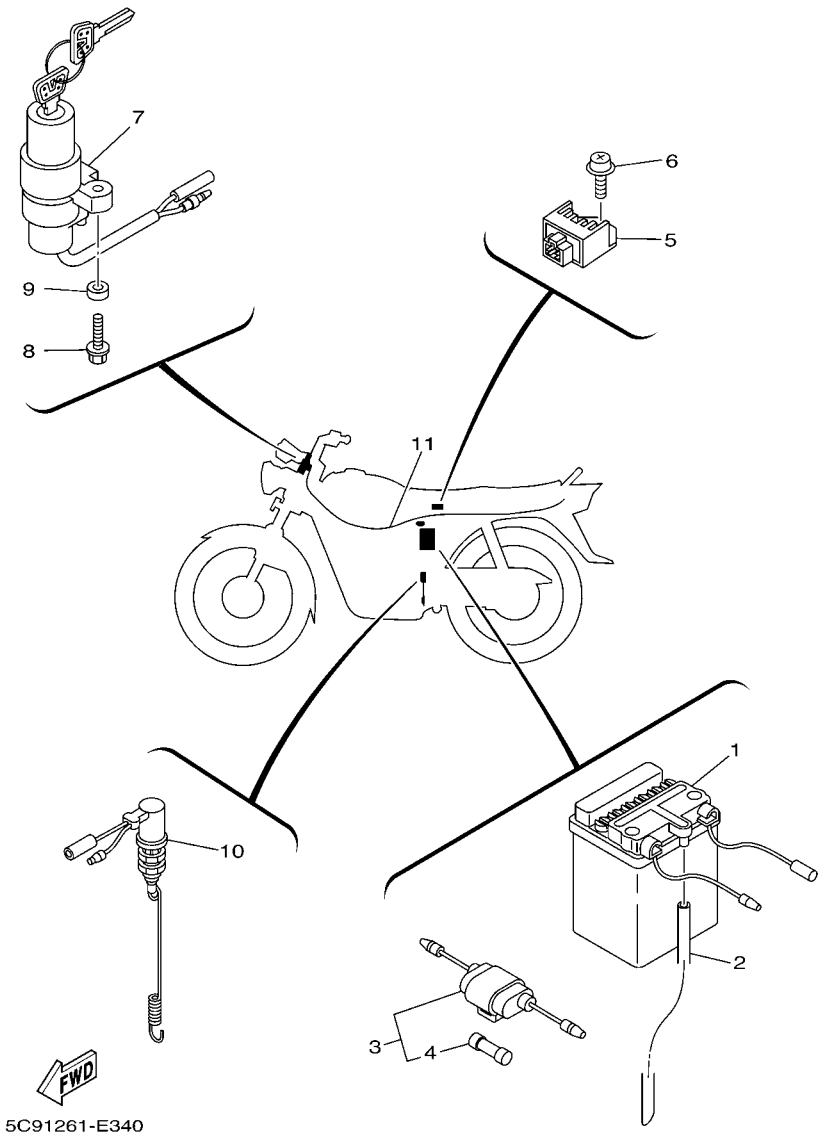

FIG. 34 ELECTRICAL 1 — EQUIPO ELECTRICO 1

REF. NO.	PART NO. CODIGO Nº	DESCRIPTION DESCRIPCION	5C91					REMARKS OBSERVACIONES
1	5DG–H2110–00	BATTERY ASSY (YB2.5L-C-2) BATERIA COMPLETA (YB2.5L-C-2)	1					
2	90445–08336	HOSE (L580) TUBO (L580)	1					
3	36L–H2150–V0	FUSE HOLDER ASSY PORTA-FUSIBLES COMPLETO	1					
4	36L–H2151–V0	.FUSE (10A) .FUSIBLE (10A)	2					
5	5KA–H1960–00	RECTIFIER & REGULATOR ASSY RECTIFICADOR Y REGULADOR	1					
6	9760N–06216	SCREW, PAN HEAD WITH WASHER TORNILLO CAB CON PLANA C/ARAN	1					
7	5TS–H2501–10	MAIN SWITCH STEERING LOCK LLAVE DE IGNICION COMPLT	1					
8	97517–06525	BOLT, WITH WASHER PERNO CON ARANDELA	2					
9	5DG–H2516–00	COLLAR, MAIN SWITCH COLLAR DE INTERRUP.PRINCIP.	1					
10	36L–H2530–V1	STOP SWITCH ASSY INTERRUPTOR DE PARADA COMPLETO	1					
11	5C9–H2590–00	WIRE HARNESS ASSY CONJUNTO DE CABLES	1					

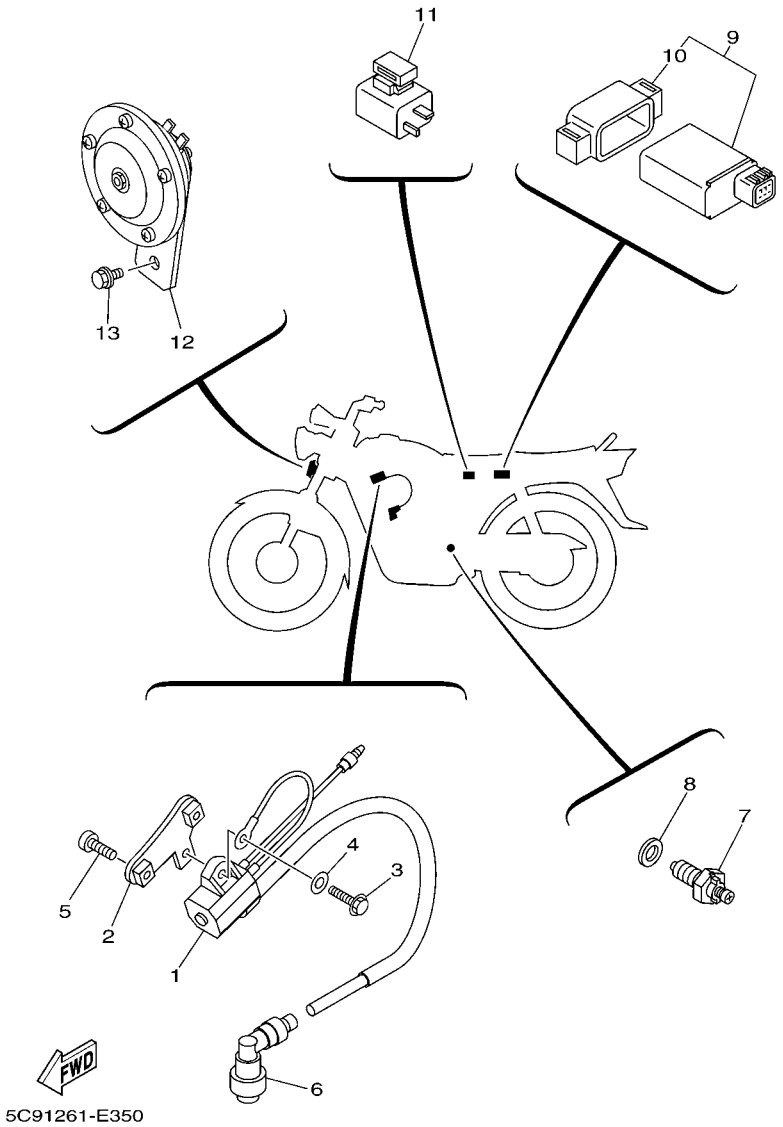

FIG. 35 ELECTRICAL 2 — EQUIPO ELECTRICO 2

REF. NO.	PART NO. CODIGO Nº	DESCRIPTION DESCRIPCION	5C91					REMARKS OBSERVACIONES
1	5KA–H2310–00	IGNITION COIL ASSY BOBINA DE ENCENDIDO COMPLETA	1					UR UR
	5KA–H2310–V0	IGNITION COIL ASSY BOBINA DE ENCENDIDO COMPLETA	1					UR UR
2	5KA–H2316–00	BRACKET, IGNITION COIL SOPORTE BOBINA ENCENDIDO	1					
3	95027–06020	BOLT, FLANGE PERNO, DE BRIDA	1					
4	92907–06200	WASHER ARANDELA	1					
5	9890N–06025	SCREW, BIND TORNILLO DE LIGAR	2					
6	4LS–H2370–00	PLUG CAP ASSY TAPON DE BUJIA COMPLT	1					
7	4LS–H2540–00	NEUTRAL SWITCH ASSY INTERRUPTOR NEUTRAL COMPL	1					
8	90430–10148	GASKET JUNTA	1					
9	5TS–H5540–10	C.D.I. UNIT ASSY UNIDAD C.D.I. COMPLETA	1					
10	5KA–H5546–20	.BAND .BANDA	1					
11	5KA–H3350–00	FLASHER RELAY ASSY RELE DE DESTELLADOR COMPL.	1					
12	5KA–H3371–10	HORN BOCINA	1					
13	90119–06843	BOLT, WITH WASHER TORNILLO CON ARANDELA	2					

NUMERICAL INDEX
INDICE NUMERICO

PART NO. CODIGO Nº	REF. NO.
5HH–14103–00	7 – 7
5KA–14104–00	7 – 23
5KA–14106–00	7 – 4
5KA–14112–30	7 – 6
5KA–14131–00	7 – 3
2MM–14142–17	7 – 11
5KA–14143–18	7 – 12
241–14147–00	7 – 20
5KA–1414G–10	7 – 10
5KA–14150–00	7 – 14
5KA–14158–00	7 – 21
5KA–14181–00	7 – 19
5HH–14185–00	7 – 13
127–14186–00	7 – 15
4TL–14191–00	7 – 8
3TU–14193–00	7 – 18
5KA–14197–00	7 – 16
4LS–14198–00	7 – 5
5KA–14239–00	7 – 9
5KA–1490J–20	7 – 2
5TS–E1111–01	1 – 1
5KA–E1111–11	1 – 1
4LS–E111F–00	4 – 4
4LS–E1133–10	1 – 2
4LS–E1134–10	1 – 3
5DG–E1166–00	9 – 3
5KA–E1167–00	9 – 2
5KA–E1181–00	1 – 13
5KA–E1185–00	1 – 5
4LS–E1186–00	1 – 8
5TS–E1311–00	1 – 16
4LS–E1351–00	1 – 17
5TS–E1400–11	2 – 1
5KA–E1422–00	2 – 6
5KA–E1445–00	2 – 7
5KA–E1603–00	2 – 12
5KA–E1605–00	2 – 12
5KA–E1607–00	2 – 12
5TS–E1631–00	2 – 9
5KA–E1633–00	2 – 10
5TS–E1636–00	2 – 9
5TS–E1638–00	2 – 9
5TS–E1651–11	2 – 5
5KA–E1681–01	2 – 3
5KA–E2111–00	3 – 1
5YY–E2113–00	3 – 5
4LS–E2116–00	3 – 4
4LS–E2117–00	3 – 7

PART NO. CODIGO Nº	REF. NO.
4LS–E2118–00	3 – 6
4LS–E2119–00	3 – 3
5KA–E2121–00	3 – 2
5YY–E2151–00	3 – 8
4LS–E2156–00	3 – 11
4LS–E2159–01	3 – 9
5TS–E2170–00	4 – 1
4LS–E2176–00	4 – 6
4LS–E2210–00	4 – 14
4LS–E2213–00	4 – 15
5KA–E2231–00	4 – 10
5KA–E2241–00	4 – 11
5YY–E3300–00	5 – 1
4LS–E3324–00	5 – 13
5KA–E3325–20	5 – 2
4LS–E3329–00	5 – 8
4LS–E3411–00	5 – 12
4LS–E3451–00	5 – 14
4LS–E3569–00	6 – 2
5KA–E3586–10	6 – 1
5KA–E3595–01	6 – 5
5C9–E4101–00	7 – 1
5KA–E4411–00	6 – 8
5DG–E4412–00	6 – 9
4LS–E443E–00	6 – 15
5DG–E4450–00	6 – 10
5KA–E4453–00	6 – 11
4LS–E4462–00	6 – 13
5DG–E4487–00	6 – 12
5TS–E4536–00	8 – 4
5TS–E4537–00	8 – 7
5DG–E4613–00	8 – 9
5C9–E4628–00	8 – 2
5KA–E4703–21	8 – 1
5C9–E4718–00	8 – 3
5TS–E5150–10	9 – 1
5KA–E5191–20	10 – 10
5KA–E5362–00	10 – 19
5KA–E5411–20	10 – 1
5DG–E5418–00	10 – 12
5TS–E5421–02	10 – 14
4LS–E5441–00	9 – 9
4LS–E5451–00	10 – 2
4LS–E5461–01	10 – 15
4LS–E5598–00	4 – 12
5VA–E5618–00	11 – 12
5C9–E5620–00	11 – 11
5YY–E5641–00	11 – 2

PART NO. CODIGO Nº	REF. NO.
5YY–E5651–01	11 – 8
5YY–E5661–00	11 – 1
5YY–E5666–00	11 – 7
5YY–E5671–00	11 – 5
5TS–E6111–10	12 – 1
5KA–E6150–00	12 – 5
5YY–E6154–00	12 – 16
4LS–E6164–00	12 – 17
5KA–E6321–00	12 – 7
5RE–E6324–00	12 – 8
5KA–E6351–01	12 – 9
4LS–E6356–00	12 – 13
5KA–E6357–00	12 – 22
4LS–E6358–00	12 – 12
5KA–E6371–00	12 – 6
4LS–E6381–00	12 – 23
4LS–E7121–02	13 – 2
4LS–E7131–00	13 – 3
4LS–E7141–00	13 – 4
5KA–E7211–01	13 – 16
4LS–E7221–00	13 – 11
4LS–E7231–00	13 – 12
4LS–E7241–00	13 – 15
4LS–E7285–00	13 – 10
4LS–E7402–01	13 – 9
5KA–E7411–00	13 – 1
4LS–E7456–00	13 – 24
4LS–E7471–00	13 – 7
4LS–E8101–01	15 – 7
5C9–E8110–00	15 – 9
5VA–E8113–00	15 – 10
4LS–E8140–01	15 – 1
4LS–E8185–00	14 – 2
4LS–E8337–00	15 – 2
4LS–E8511–00	14 – 5
4LS–E8512–00	14 – 6
4LS–E8513–00	14 – 7
36L–E8531–00	14 – 8
36L–E8535–00	14 – 9
4LS–E8540–01	14 – 1
5C9–F1110–00	16 – 1
5DG–F1316–00	16 – 2
5KA–F1318–00	16 – 6
36L–F1398–01	16 – 13
5C9–F1510–00–33	17 – 1
5C9–F1510–00–H6	17 – 1
5C9–F1510–00–P0	17 – 1
5C9–F1510–00–P1	17 – 1

PART NO. CODIGO Nº	REF. NO.
5DG–F1518–00	17 – 3
4LS–F1521–00	17 – 6
5DG–F1575–00	17 – 8
5DG–F1611–03	17 – 9
5DG–F1621–00	17 – 15
5C9–F1668–00	19 – 10
5C9–F1685–00	17 – 12
5C9–F1711–00	18 – 13
5KA–F1717–00	18 – 6
5C9–F1721–00	18 – 14
5C9–F173E–30	18 – 15
5C9–F173E–40	18 – 15
5C9–F173E–50	18 – 15
5C9–F173E–60	18 – 15
5C9–F173F–30	18 – 16
5C9–F173F–40	18 – 16
5C9–F173F–50	18 – 16
5C9–F173F–60	18 – 16
5KA–F1747–00	18 – 11
5KA–F176V–00	18 – 5
5DG–F1778–00	18 – 2
5DG–F177E–00	18 – 9
5KA–F177F–10	17 – 14
5DG–F177G–00	18 – 8
5KA–F179E–00	18 – 10
5C9–F2110–00	19 – 1
36L–F2123–00	19 – 2
4LS–F2141–00	19 – 3
4LS–F2151–00	19 – 6
5KA–F2210–30	19 – 11
5JV–F2310–00	19 – 7
5KA–F3102–30	21 – 1
5KA–F3103–30	21 – 18
5KA–F3110–10	21 – 5
	21 – 22
4LS–F3126–00	21 – 2
5KA–F312G–00	21 – 15
	21 – 32
4LS–F3136–00	21 – 19
5KA–F3141–10	21 – 9
	21 – 26
4LS–F3144–00	21 – 8
	21 – 25
4LS–F3145–00	21 – 4
	21 – 21
5KA–F3147–00	21 – 12
	21 – 29
36L–F3152–00	21 – 14

PART NO. CODIGO Nº	REF. NO.
36L–F3152–00	21 – 31
4LS–F3153–00	21 – 3
	21 – 20
36L–F3157–00	21 – 13
	21 – 30
36L–F3158–00	21 – 10
	21 – 27
5KA–F3165–00	21 – 16
	21 – 33
5KA–F3170–00	21 – 6
	21 – 23
36L–F3173–00	21 – 7
	21 – 24
5C9–F3174–00	20 – 16
4LS–F317J–00	20 – 18
36L–F3181–00	21 – 11
	21 – 28
5KA–F3340–00	21 – 35
36L–F3346–01	21 – 37
5KA–F3394–00	21 – 17
	21 – 34
5KA–F3411–00	21 – 36
5KA–F3412–00	20 – 1
5KA–F3413–00	20 – 2
5KA–F3414–00	20 – 3
36L–F3416–00	20 – 6
4LS–F3418–00	20 – 8
4LS–F341E–00	20 – 5
5KA–F341E–00	20 – 5
5US–F341E–00	20 – 4
4LS–F341E–10	20 – 4
5KA–F3435–10	20 – 11
5TS–F3441–01	20 – 14
5TS–F3442–00	20 – 15
5KA–F3448–10	20 – 10
5KA–F3466–01	20 – 19
5C9–F4110–00	22 – 1
5KA–F413B–00	22 – 26
5TM–F4141–00	22 – 24
5C9–F415A–00	22 – 2
5C9–F4181–00	22 – 3
4LS–F4183–00	22 – 4
4UU–F4183–01	22 – 5
4UU–F4186–00	22 – 6
5C9–F4240–00	22 – 25
5C9–F4240–10	22 – 25
5C9–F4240–20	22 – 25
5C9–F4240–30	22 – 25

PART NO. CODIGO Nº	REF. NO.
4LS–F4500–02	22 – 8
4UU–F4512–00	22 – 14
4UU–F4515–00	22 – 13
4UU–F4521–00	22 – 11
4UU–F4523–00	22 – 17
4UU–F4524–00	22 – 16
4UU–F4534–00	22 – 9
4UU–F4565–00	22 – 12
4UU–F4650–01	22 – 20
5C9–F471K–00	23 – 5
5C9–F472K–00	23 – 6
5C9–F4730–00	23 – 1
5C9–F4731–00	23 – 2
5C9–F4741–00	23 – 3
5C9–F4756–00–33	23 – 12
5C9–F4756–00–H6	23 – 12
5C9–F4756–00–P0	23 – 12
5C9–F4756–00–P1	23 – 12
5C9–F4773–00	23 – 9
5C9–F477M–00	23 – 13
5C9–F477M–10	23 – 13
5C9–F477M–20	23 – 13
5C9–F477M–30	23 – 13
5C9–F477N–00	23 – 14
5C9–F477N–10	23 – 14
5C9–F477N–20	23 – 14
5C9–F477N–30	23 – 14
5US–F5104–00	24 – 21
	25 – 26
5C9–F5108–00	24 – 22
5TR–F5111–00	24 – 1
36L–F5116–00	24 – 2
36L–F5118–00	24 – 24
36L–F5121–10	24 – 5
36L–F5135–11	24 – 8
36L–F5136–00	24 – 9
36L–F5137–00	24 – 30
36L–F5138–11	24 – 10
36L–F513A–00	24 – 20
5US–F5144–00	24 – 23
	25 – 30
5US–F5144–V0	24 – 23
	25 – 30
36L–F5155–00	24 – 15
36L–F5181–00	24 – 25
5TR–F5311–00	25 – 1
36L–F5315–00	25 – 3
36L–F5321–11	25 – 9

NUMERICAL INDEX
INDICE NUMERICO

PART NO. CODIGO Nº	REF. NO.
36L–F533A–00	25 – 16
36L–F5351–00	24 – 18
	25 – 12
4LS–F5355–00	25 – 13
5C9–F5364–00	25 – 8
36L–F5366–10	25 – 17
5VA–F5371–00	25 – 31
5C9–F5376–00	25 – 40
5C9–F5377–00	25 – 41
5KA–F5381–00	25 – 39
5C9–F5387–00	25 – 21
5C9–F5388–00	25 – 44
4JF–F5412–00	25 – 24
5C9–F5444–00	25 – 22
5C9–F6111–00	26 – 1
5C9–F6240–00	26 – 10
5VA–F6241–00	26 – 9
5VA–F6242–00	26 – 11
5C9–F6243–00	26 – 12
36L–F6249–00	26 – 13
4JF–F6280–00	26 – 17
36L–F6281–10	26 – 14
5KA–F6282–10	26 – 15
4JF–F6290–00	26 – 18
5KA–F6311–10	26 – 2
5KA–F6335–10	26 – 3
5KA–F6341–21	26 – 5
5TS–F6372–00	26 – 4
	26 – 6
5C9–F7111–00	27 – 1
5C9–F7112–00	27 – 2
5C9–F7114–00	8 – 8
5C9–F7115–00	27 – 3
5C9–F7211–00	27 – 6
5VA–F7231–00	27 – 8
5VA–F7311–00	27 – 21
5C9–F7411–00	27 – 15
5C9–F7413–00	27 – 18
5C9–F7413–10	27 – 19
5GE–F7431–00	27 – 27
5C9–F7432–00	27 – 25
5GE–F7433–00	27 – 29
5GE–F7441–00	27 – 28
5C9–F7442–00	27 – 26
5C9–F8100–00	16 – 15
5KA–F8490–01	18 – 3
5KA–H1410–30	28 – 2
5KA–H1450–30	28 – 1

PART NO. CODIGO Nº	REF. NO.
5KA–H1960–00	34 – 5
5DG–H2110–00	34 – 1
36L–H2150–V0	34 – 3
36L–H2151–V0	34 – 4
5KA–H2310–00	35 – 1
5KA–H2310–V0	35 – 1
5KA–H2316–00	35 – 2
4LS–H2370–00	35 – 6
5TS–H2501–10	34 – 7
5DG–H2516–00	34 – 9
5KA–H252K–00	29 – 3
	29 – 7
	29 – 12
	29 – 16
36L–H2530–V1	34 – 10
4LS–H2540–00	35 – 7
5C9–H2590–00	34 – 11
5TS–H2911–00	33 – 8
5TS–H2921–00	33 – 1
5KA–H3310–10	29 – 1
36L–H3311–00	29 – 2
	29 – 6
	29 – 11
	29 – 15
5KA–H3320–10	29 – 5
5KA–H3330–40	29 – 10
5KA–H3340–40	29 – 14
5KA–H3350–00	35 – 11
5KA–H3371–10	35 – 12
5KA–H3500–20	30 – 1
5KA–H3509–00	30 – 2
5KA–H3513–00	30 – 8
4LS–H3517–00	30 – 3
4LS–H3517–10	30 – 4
5KA–H3519–00	30 – 5
4LS–H3524–00	30 – 6
5KA–H3550–10	30 – 10
4LS–H3912–00	33 – 9
4LS–H3922–00	33 – 2
36L–H3936–00	33 – 14
	33 – 17
36L–H3945–V0	33 – 4
	33 – 10
5KA–H3972–20	33 – 15
36L–H3980–V0	33 – 3
36L–H398X–00	18 – 4
5KA–H4130–10	31 – 5
5KA–H4310–10	31 – 1

PART NO. CODIGO Nº	REF. NO.
4LS–H4314–00	31 – 4
5KA–H4315–10	31 – 3
5KA–H4320–10	31 – 2
5DG–H4710–10	32 – 1
36L–H4714–00	32 – 3
5DG–H4721–00	32 – 4
5KA–H4736–00	32 – 2
5DG–H4743–00	32 – 5
5TS–H5540–10	35 – 9
5KA–H5546–20	35 – 10
5KA–WE141–00	2 – 2
5KA–WF141–10	7 – 22
36L–WF536–00	24 – 6
	25 – 10
90101–06278	25 – 14
90101–06814	24 – 16
90101–08590	4 – 8
90101–10437	20 – 12
90105–06800	9 – 7
90105–06801	9 – 8
90105–06802	9 – 6
90105–08002	16 – 8
90105–08006	16 – 10
90105–08007	16 – 11
90105–08809	16 – 3
	16 – 7
	23 – 10
90105–08845	1 – 10
90105–088A6	16 – 4
90109–06806	15 – 3
90109–08032	27 – 23
90109–08063	25 – 32
90109–08368	25 – 35
90109–08864	25 – 23
90110–06804	1 – 15
90119–05020	12 – 11
90119–06108	6 – 17
	17 – 11
	17 – 13
	18 – 12
	23 – 4
90119–06843	18 – 7
	35 – 13
90123–06010	26 – 7
90149–04242	22 – 15
90151–06801	14 – 4
90153–08011	25 – 45
90155–06800	5 – 9

PART NO. CODIGO Nº	REF. NO.
90157–05116	26 – 16
90157–06801	22 – 18
90157–06802	28 – 4
90157–06805	28 – 3
90159–05065	23 – 8
90164–05014	32 – 8
90170–05302	3 – 10
90170–12060	12 – 20
90170–12065	19 – 4
90171–10803	24 – 26
90171–14800	25 – 42
90176–10073	19 – 13
90179–06143	26 – 8
90179–06806	27 – 14
90179–08816	25 – 25
90179–12659	11 – 13
	12 – 4
90179–25033	20 – 7
90201–07076	24 – 12
90201–07641	5 – 4
90201–07800	5 – 7
90201–08085	33 – 7
	33 – 13
90201–08326	4 – 7
90201–08609	1 – 11
90201–08612	31 – 7
90201–106F2	19 – 12
90201–122H1	2 – 14
	12 – 3
90201–127E1	13 – 19
90201–15700	13 – 17
90201–15827	11 – 9
90201–20266	13 – 13
90201–20269	24 – 13
90201–202L3	11 – 4
90202–05031	17 – 7
90202–05193	22 – 19
90202–26142	20 – 9
90206–06090	8 – 5
90208–07052	5 – 5
90208–17032	12 – 18
90209–10160	20 – 13
90209–18070	27 – 30
90215–12815	12 – 19
90240–08800	27 – 31
90249–12008	27 – 13
90252–27800	27 – 32
90252–55800	27 – 5

PART NO. CODIGO Nº	REF. NO.
90280–03017	2 – 13
90282–05001	12 – 2
90338–16803	23 – 11
90340–12097	5 – 10
90340–14814	10 – 6
90340–32808	10 – 8
90387–066K1	6 – 18
90387–121L9	24 – 29
90430–06817	4 – 17
90430–10148	35 – 8
90430–12227	5 – 11
90445–08336	34 – 2
90445–10806	22 – 22
90460–43053	6 – 19
90464–10829	17 – 10
90467–09006	22 – 23
90467–10819	6 – 3
90467–11106	6 – 16
90467–13858	9 – 4
90468–12007	25 – 34
	25 – 38
	27 – 10
90468–26048	11 – 3
90480–01870	23 – 7
90480–13426	18 – 1
90480–14800	32 – 7
90501–10245	27 – 12
90501–216A6	12 – 10
90506–14801	24 – 7
	25 – 11
90506–25047	27 – 22
90506–29054	27 – 4
90508–14857	12 – 24
90508–26667	11 – 6
90508–32056	27 – 7
90508–32837	15 – 5
90560–15136	25 – 2
91317–06012	4 – 5
91317–06020	8 – 10
91401–20020	24 – 28
91401–30030	25 – 43
92907–06200	12 – 14
	35 – 4
92907–08200	27 – 17
9290N–06600	27 – 9
	27 – 11
9290N–08100	25 – 37
9290N–10200	24 – 27

PART NO. CODIGO Nº	REF. NO.
9290N–12200	19 – 5
93101–10838	10 – 21
93102–12875	15 – 4
93102–12877	12 – 25
93102–18802	24 – 4
93102–20876	13 – 21
93104–07804	24 – 11
93104–22805	25 – 6
93105–47801	24 – 19
93106–26801	25 – 20
93109–20821	11 – 14
93210–108B1	4 – 3
93210–14806	24 – 31
93210–14899	10 – 7
93210–19809	10 – 20
93210–27802	6 – 6
93210–32801	6 – 4
93210–328A4	10 – 9
93210–42807	25 – 7
93210–44889	1 – 9
93210–71462	1 – 6
93306–002Y1	4 – 2
93306–004Y0	25 – 19
93306–201Y4	13 – 5
93306–202X6	13 – 22
93306–202Y0	25 – 4
93306–202Y1	25 – 5
93306–203X2	13 – 6
93306–204Y6	13 – 20
93306–205X3	2 – 8
93306–301Y3	24 – 3
93310–326Y7	2 – 4
93410–20038	13 – 14
93410–20808	24 – 14
93420–42801	25 – 18
93440–10109	1 – 4
93450–14088	2 – 11
93503–16807	12 – 21
93602–20800	5 – 6
93604–10011	14 – 3
93608–30839	15 – 8
93822–14800	13 – 23
94127–18826	25 – 27
94227–18824	25 – 28
94325–18822	25 – 29
94568–43090	4 – 9
94568–81111	25 – 47
94568–86111	25 – 47

NUMERICAL INDEX
INDICE NUMERICO

PART NO. CODIGO Nº	REF. NO.
94668–81001	25 – 48
94668–86001	25 – 48
94701–00862	1 – 12
95024–08050	20 – 21
95027–06010	13 – 25
95027–06016	4 – 16
95027–06020	1 – 7
	35 – 3
95027–06025	6 – 7
95027–06035	10 – 4
	10 – 17
95027–06045	10 – 5
	10 – 18
95301–05600	30 – 7
95307–06600	12 – 15
95307–08700	25 – 46
	27 – 24
9530N–05600	17 – 5
9530N–06600	24 – 17
	25 – 15
9530N–08600	25 – 33
	31 – 8
9530N–08700	25 – 36
95707–06300	33 – 5
	33 – 11
95707–08500	16 – 5
	16 – 9
	16 – 12
95707–12500	2 – 15
9570N–12500	29 – 9
	29 – 18
95807–06020	4 – 13
95807–08020	8 – 11
9580N–06012	30 – 9
9580N–06016	20 – 20
9580N–08020	27 – 33
95817–06016	17 – 2
95817–08020	27 – 20
9582N–06016	20 – 17
97007–08025	31 – 6
97007–08030	22 – 7
97027–06020	15 – 11
97027–08020	27 – 16
97507–06425	33 – 6
9750M–06425	33 – 12
97517–06525	34 – 8
97607–04114	7 – 17
97607–06225	6 – 14

PART NO. CODIGO Nº	REF. NO.
9760N–05214	17 – 4
9760N–06212	19 – 8
9760N–06216	19 – 9
	34 – 6
97707–06112	29 – 4
	29 – 8
	29 – 13
	29 – 17
9770N–40520	32 – 6
98507–03008	22 – 10
98507–05010	22 – 21
98507–06010	10 – 11
98507–06014	13 – 8
9850M–05012	33 – 16
9870N–06030	16 – 14
98907–06016	10 – 13
9890N–06025	35 – 5
98980–06010	8 – 6
99001–05600	5 – 3
99001–10600	15 – 6
99009–15400	11 – 10
	13 – 18
99009–20500	12 – 26
99241–00080	23 – 15
99244–00080	23 – 15
99246–00080	23 – 15
99530–10114	1 – 14
	9 – 5
	10 – 3
	10 – 16

PART NO. CODIGO Nº	REF. NO.

PART NO. CODIGO Nº	REF. NO.

PART NO. CODIGO Nº	REF. NO.

PART NO. CODIGO Nº	REF. NO.